Characterisation of volumetric error variation with temperature

IDEKO
MEMBER OF BASQUE RESEARCH & TECHNOLOGY ALLIANCE

Special Interest Group Meeting
Thermal Issues
13th – 14th March 2024

Beñat Iñigo
Natalia Colinas
Luis Norberto Lopez de Lacalle
Gorka Aguirre

CONTENTS

VOLUMETRIC ERRORS

- Tool positioning errors in 3D machine volume
- Highly relevant and challenging in large machine

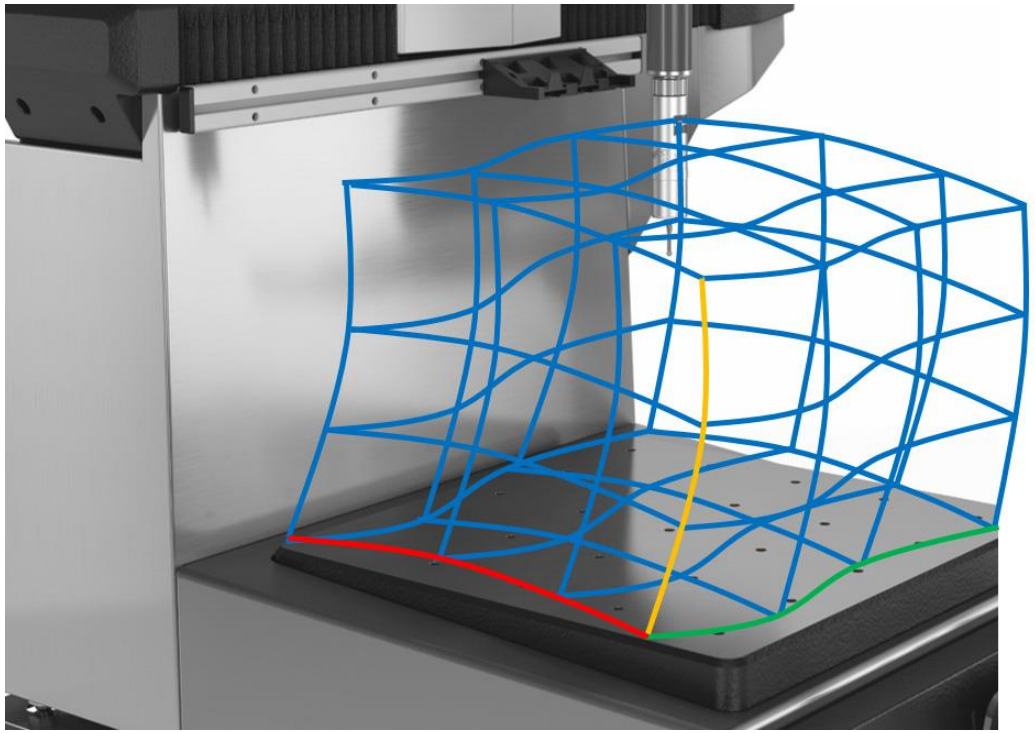

ETALON LINECAL®

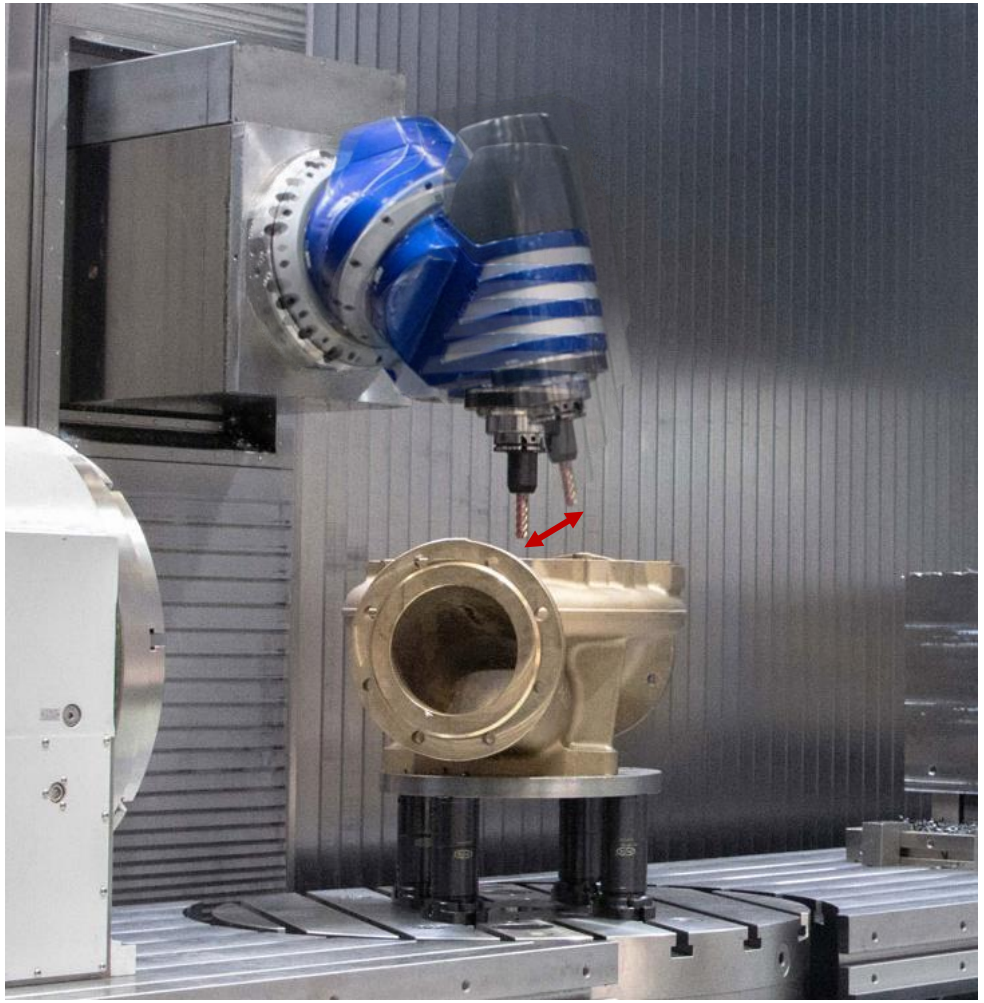

SORALUCE machine tool

VOLUMETRIC ERRORS

Geometric errors

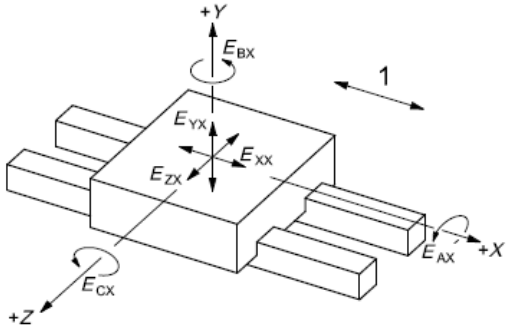

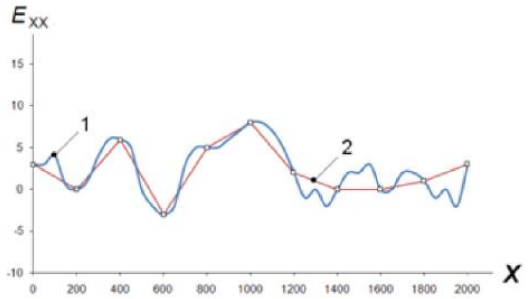

ISO 230-Part 1

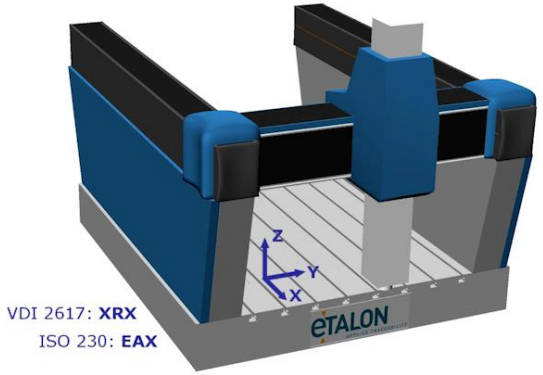

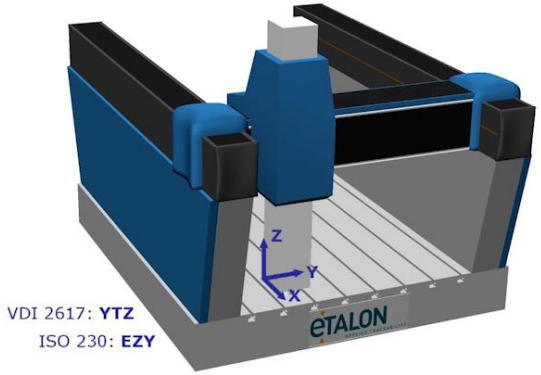

www.etalonproducts.com

Thermal errors

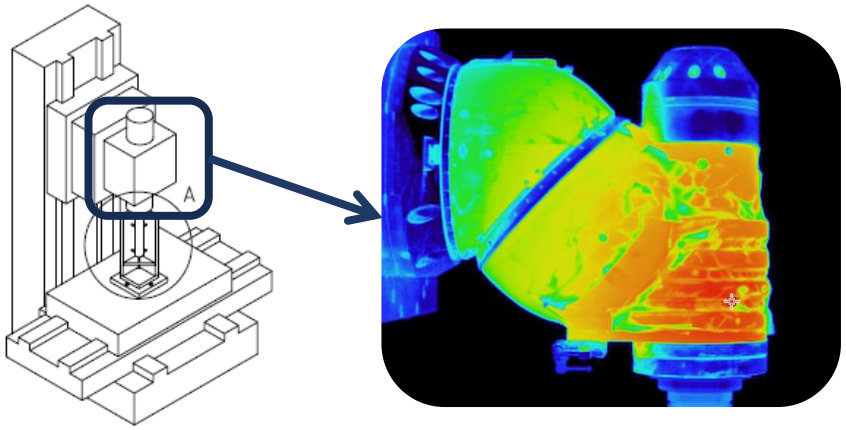

Internal heat sources

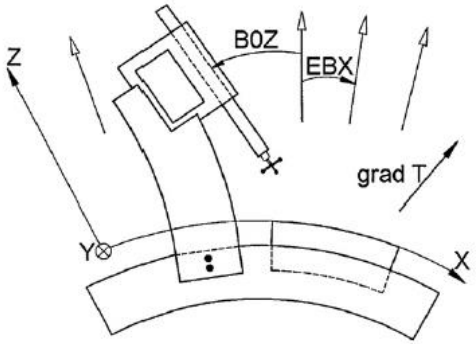

Ambient temperature influence

VOLUMETRIC ERRORS

Geometric errors

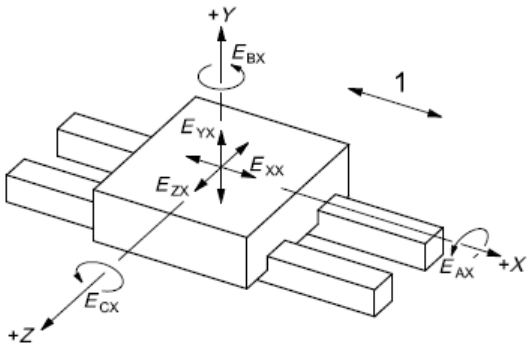

Thermal errors

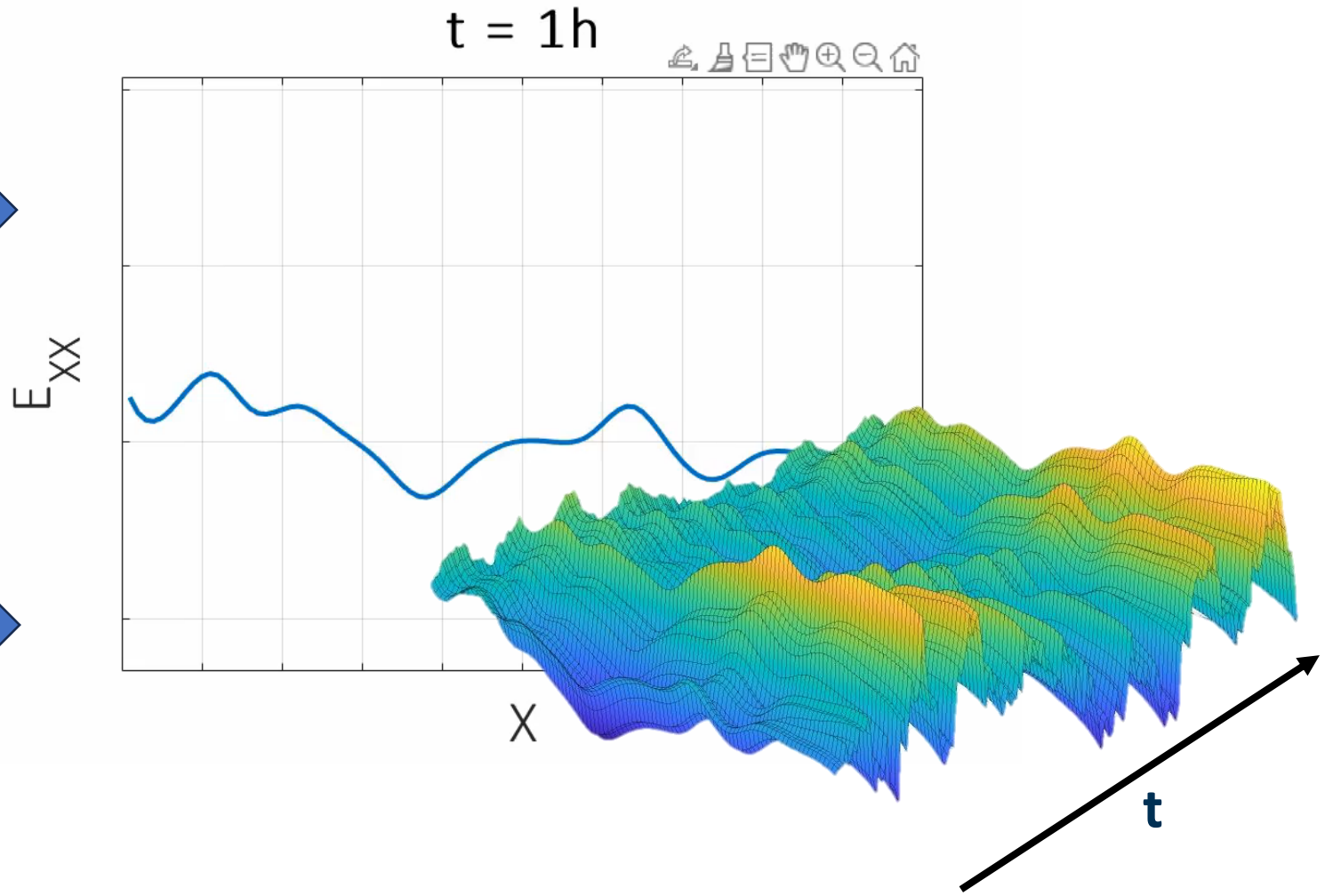

VOLUMETRIC ERRORS

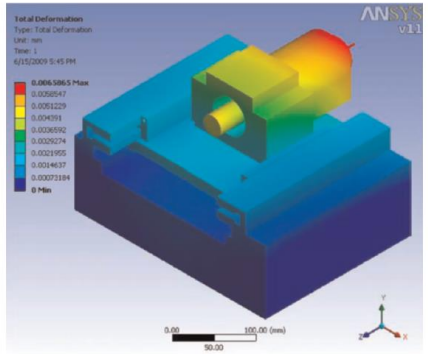

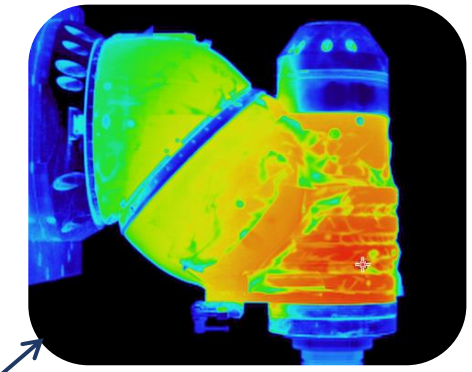

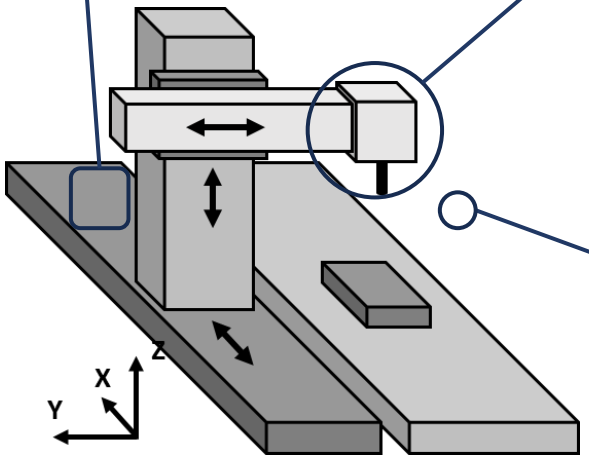

INTERNAL HEAT SOURCES

- Rotary axes, spindle
- Ballscrew
- Internal cooling systems
- …
  - Fast variations
  - Local effects

AMBIENT TEMPERATURE

- 24H/365D Cycle
- Outdoor temperature
- Workshop temperature control
- Nearby machines
- …
  - Slow variations
  - Distributed effect

VOLUMETRIC ERRORS

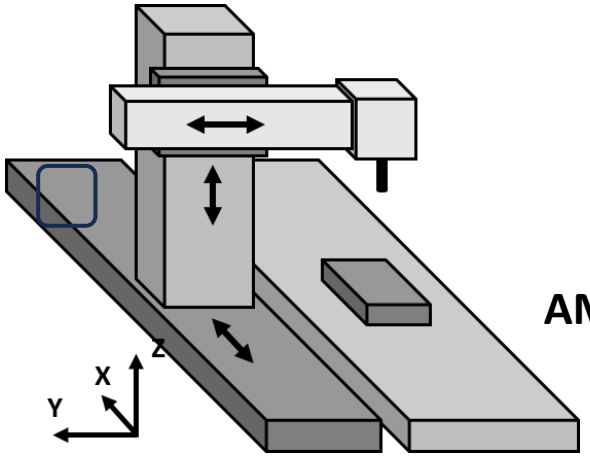

INTERNAL HEAT SOURCES

- Rotary axes, spindle
- Ballscrew
- Internal cooling systems
- …

  - Fast variations
  - Local effects

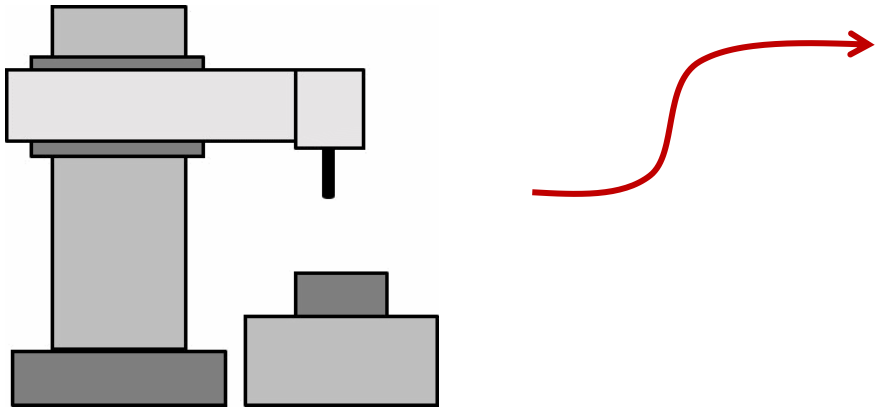

AMBIENT TEMPERATURE

- 24H/365D Cycle
- Outdoor temperature
- Workshop temperature control
- Nearby machines
- …

  - Slow variations
  - Distributed effect

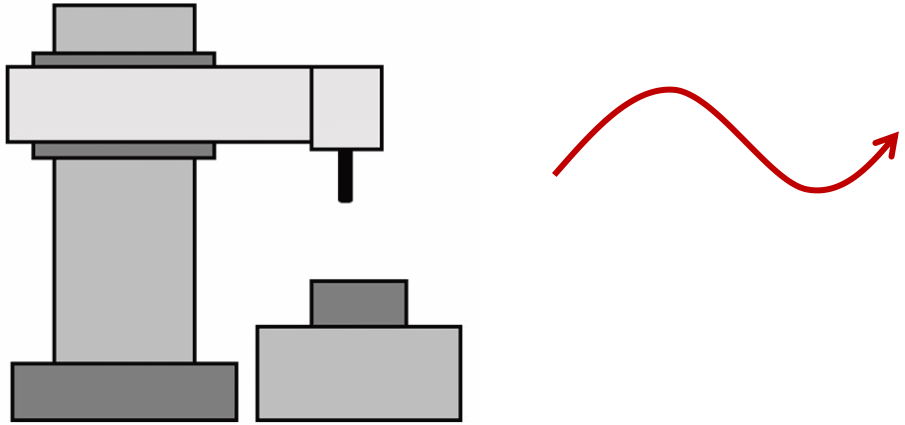

CHARACTERIZATION

New system requirements

- Accuracy
- Low cost
- Automation

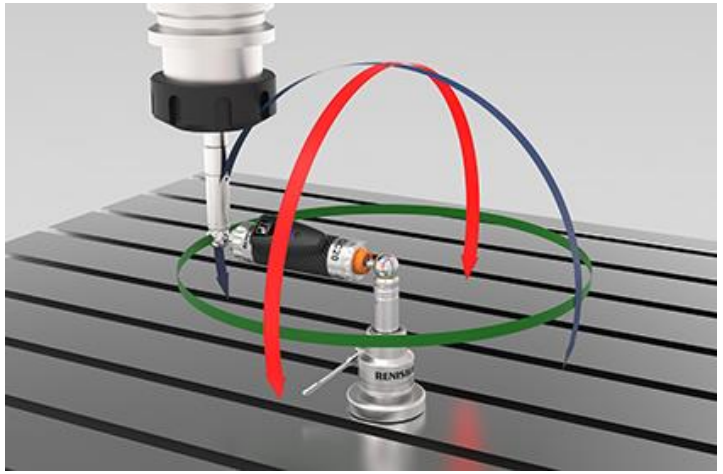

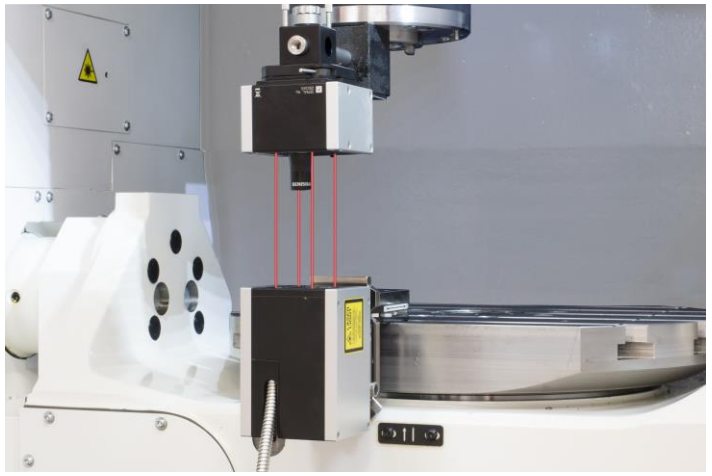

CHARACTERIZATION

Artifact and measurement cycle **design optimization**

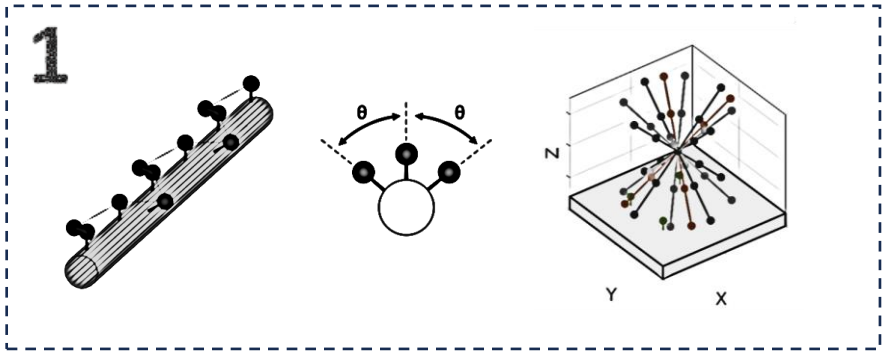

Characterisation test and **error identification**

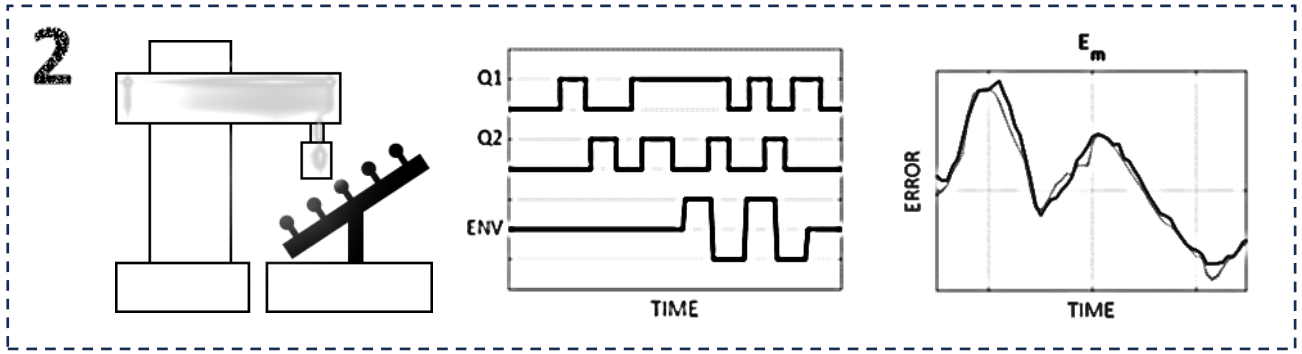

Uncertainty estimation

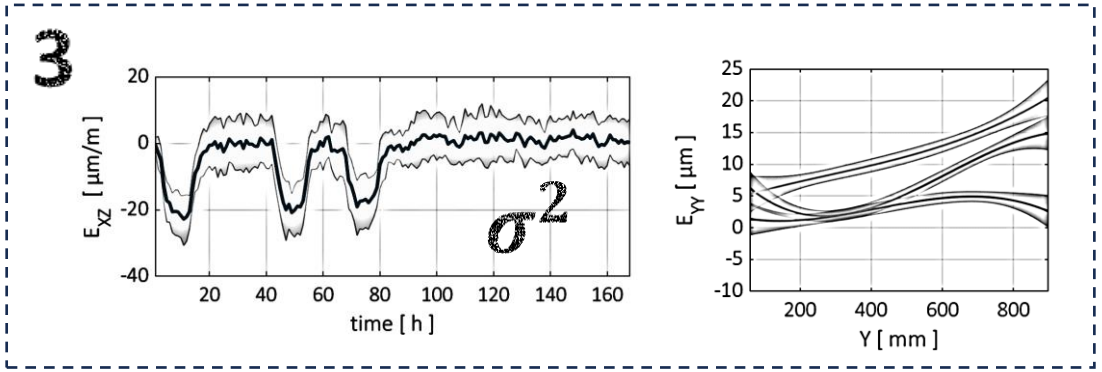

Result **analysis and interpretation**

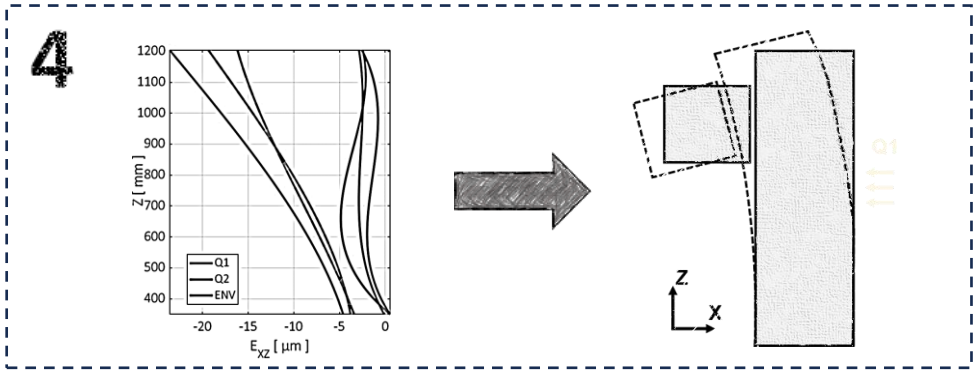

CHARACTERIZATION

Optimization based on Monte Carlo simulations for uncertainty propagation.

- Artifact design
- Measurement cycle

MEASUREMENT CYCLE

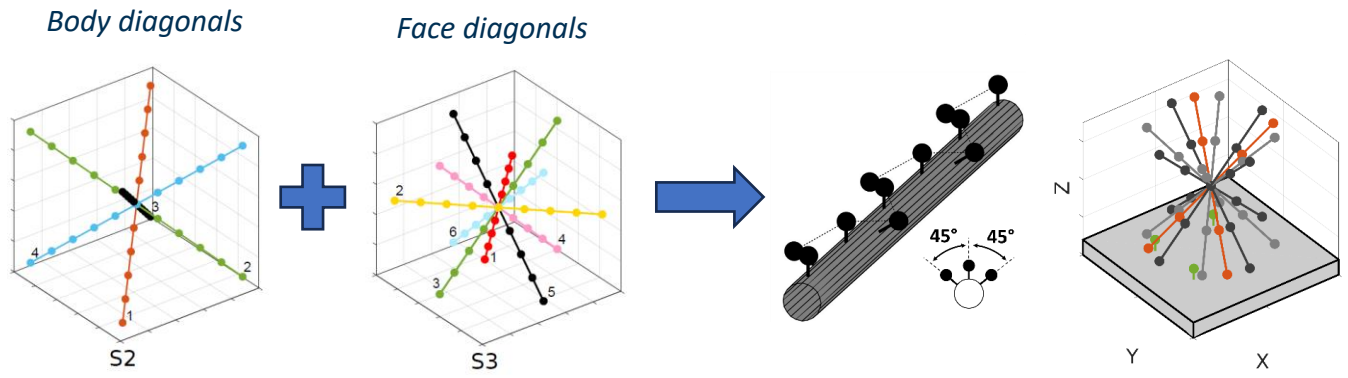

ARTIFACT DESIGN

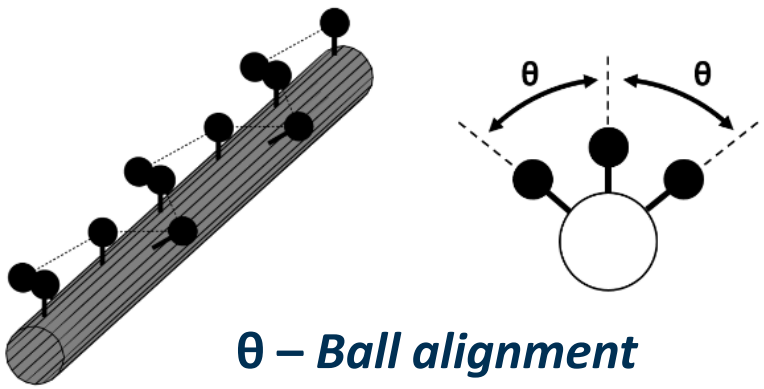

θ – Ball alignment

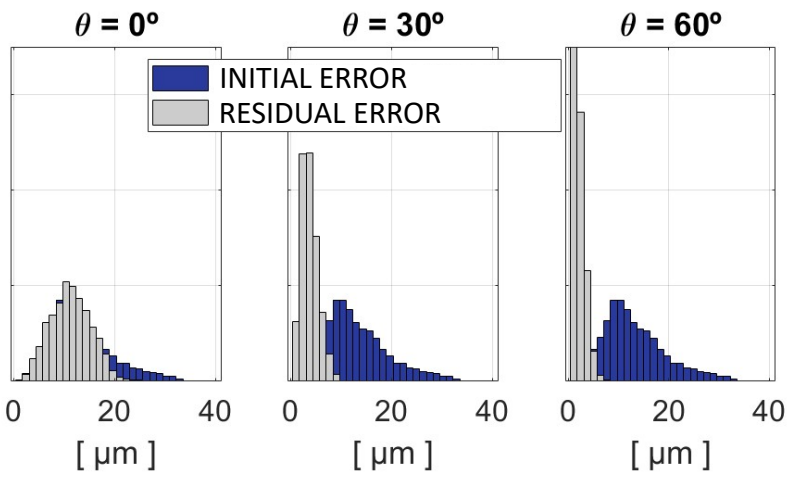

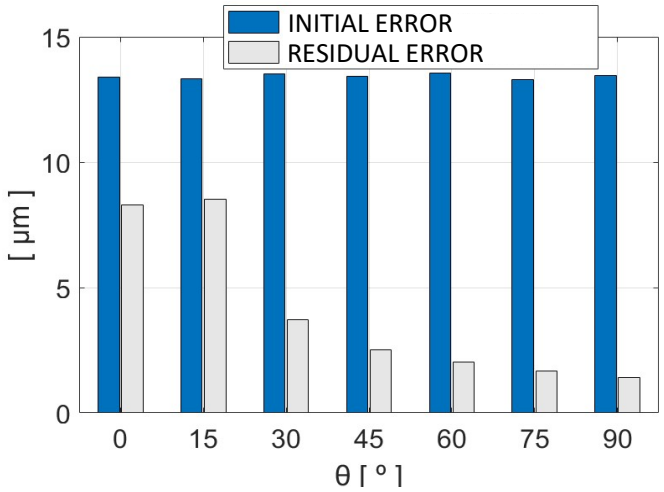

CHARACTERIZATION

Characterization test

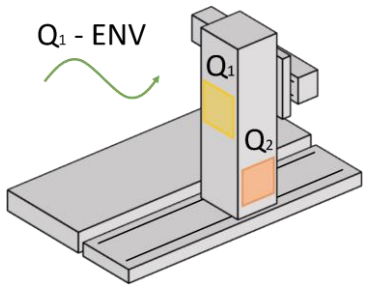

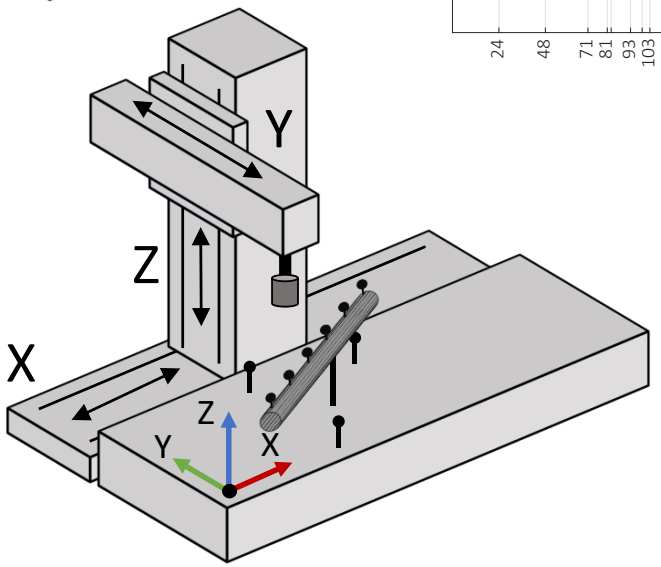

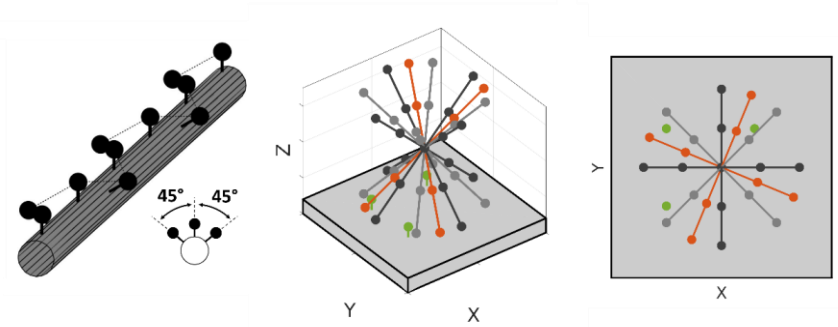

ERROR ESTIMATION

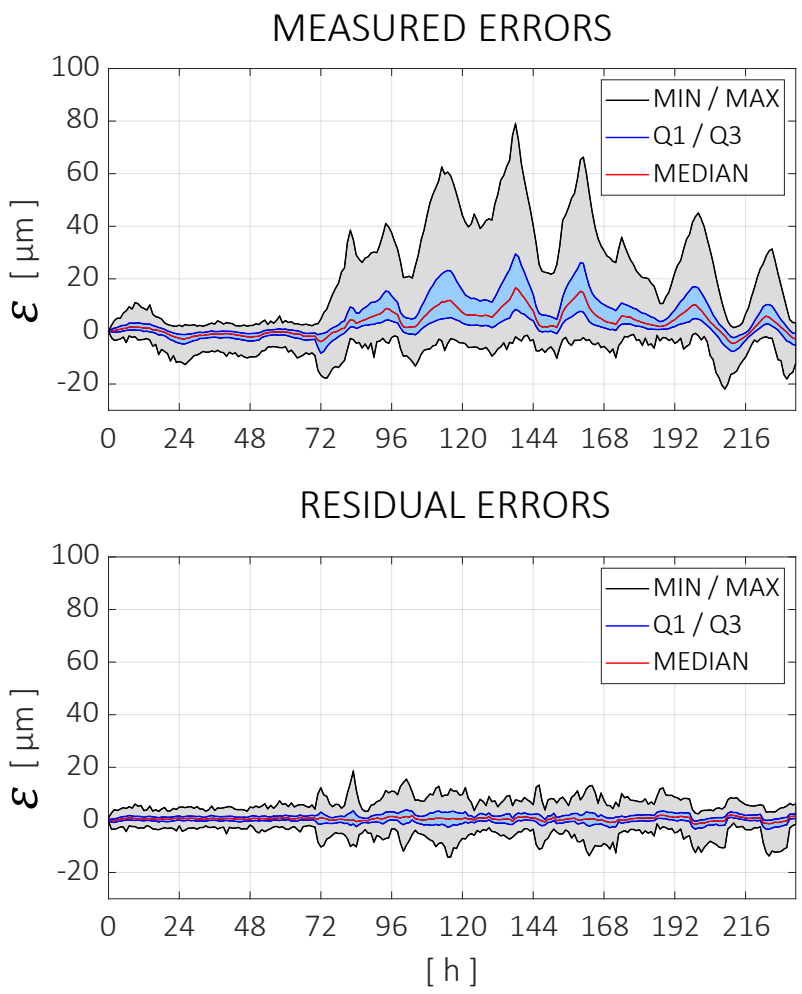

LEAST SQUARES ESTIMATION

$$\min_{E_X^t}\left(\sum(\varepsilon_{ij,k}^t - \bar{\varepsilon}_{ij,k}^t)^2\right)$$

$$\boldsymbol{E_X^t} = (\boldsymbol{J}^T \cdot \boldsymbol{J} + \lambda \boldsymbol{I})^{-1} \cdot \boldsymbol{J}^T \cdot \boldsymbol{y}$$

$$VM = {}^0\mathrm{T}_X \cdot {}^X\mathrm{T}_Z \cdot {}^Z\mathrm{T}_Y \cdot {}^Y\mathrm{t}$$

$${}^0\mathbf{T}_X = \begin{bmatrix} 1 & ECX(x) & EBX(x) & x + EXX(x) \\ ECX(x) & 1 & -EAX(x) & EYX(x) \\ EBX(x) & EAX(x) & 1 & EZX(x) \\ 0 & 0 & 0 & 1 \end{bmatrix}$$

$${}^X\mathbf{T}_Z = \begin{bmatrix} 1 & -ECZ(z) & EBZ(z) & EB0Z \cdot z + EXZ(z) \\ ECZ(z) & 1 & EAZ(z) & EYZ(z) \\ -EBZ(z) & EAZ(z) & 1 & z + EZZ(z) \\ 0 & 0 & 0 & 1 \end{bmatrix}$$

$${}^Z\mathbf{T}_Y = \begin{bmatrix} 1 & -ECY(y) & EBY(y) & EC0Y \cdot y + EXY(y) \\ ECY(y) & 1 & -EAY(y) & y + EYY(y) \\ -EBY(y) & EAY(y) & 1 & EA0Y \cdot y + EZY(y) \\ 0 & 0 & 0 & 1 \end{bmatrix}$$

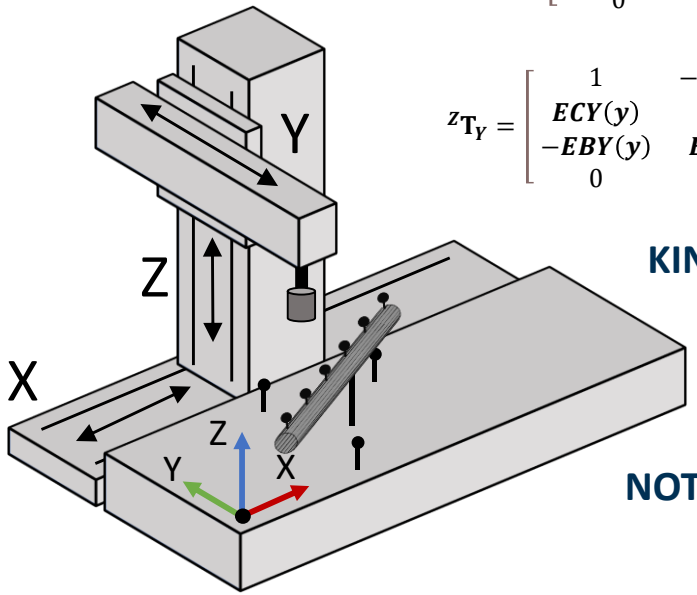

KINEMATIC MODEL BASED ON PARAMETRIC AXIS ERRORS

NOT A COMPENSATION MODEL
NO TEMPERATURE INPUT

UNCERTAINTY ANALYSIS

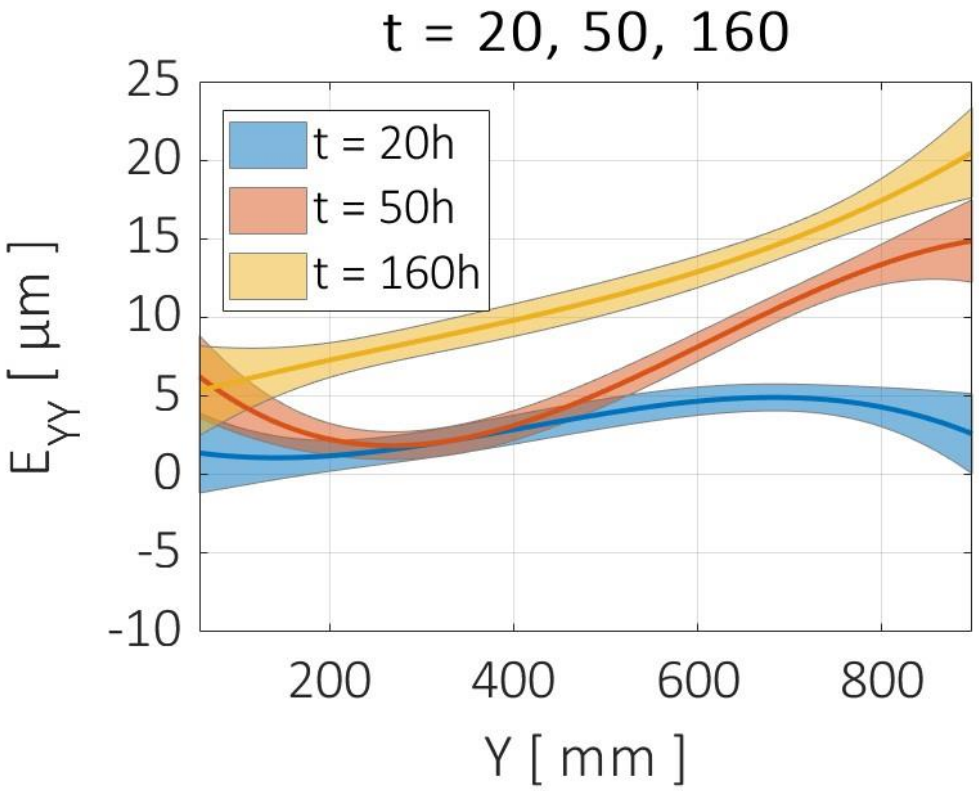

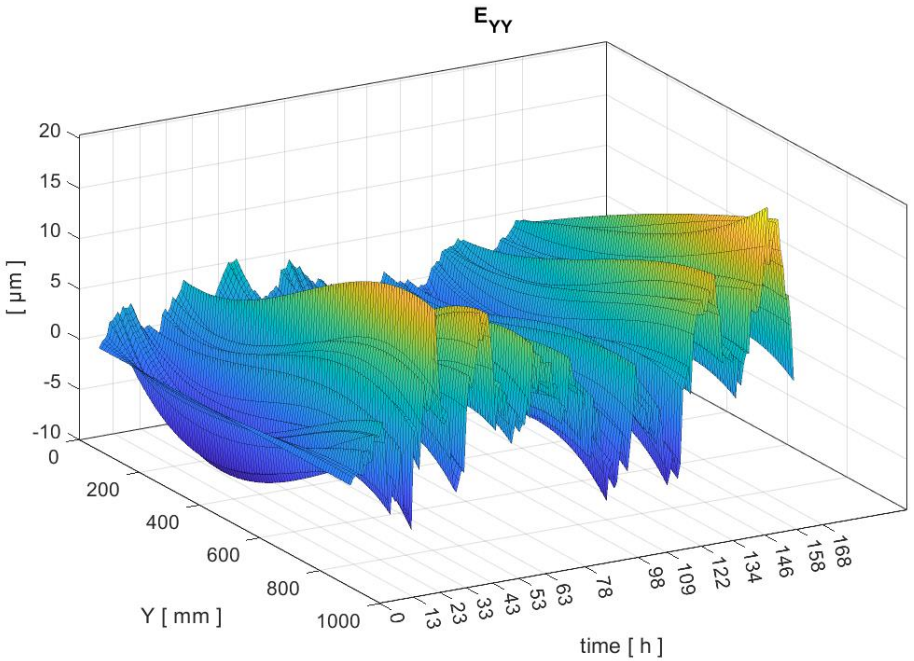

ERROR UNCERTAINTY IS ESTIMATED BASED ON THE RESIDUALS OF THE IDENTIFICATION PROCESS

$$\sigma_X^2 = (\boldsymbol{J}^T \cdot \boldsymbol{J})^{-1} \cdot \sigma_\varepsilon^2$$

CONCLUSIONS

- A new procedure for the characterization of the volumetric errors of a medium size machine tool has been presented
- An error model is obtained that can estimate the positioning error at any position in the workspace
- The error model helps in understanding the origin and effect of thermal errors.
- An uncertainty estimation is obtained for each estimated error

IDEKO

MEMBER OF BASQUE RESEARCH
& TECHNOLOGY ALLIANCE