Data and mechanism fusion modeling approach for real-time prediction of spindle transient temperature field

Dr. Zhengchun Du
School of Mechanical Engineering, Shanghai Jiao Tong University, China
zcdu@sjtu.edu.cn

上海交通大學
SHANGHAI JIAO TONG UNIVERSITY

Contents

Introduction:
The development tendency of spindles

Digital twin

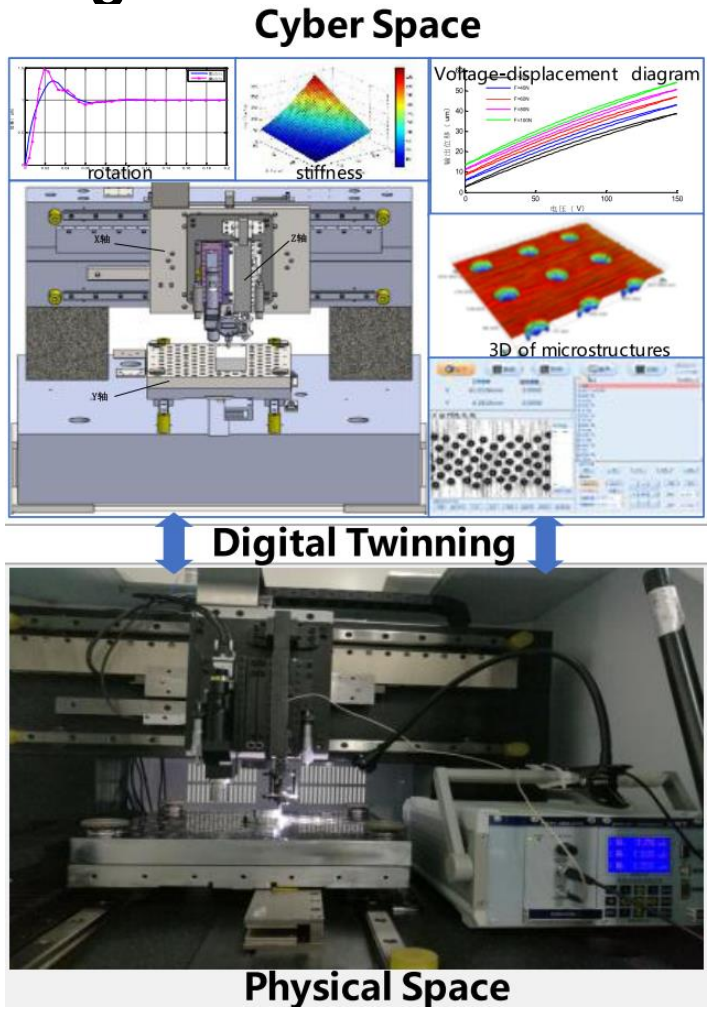

Error compensation

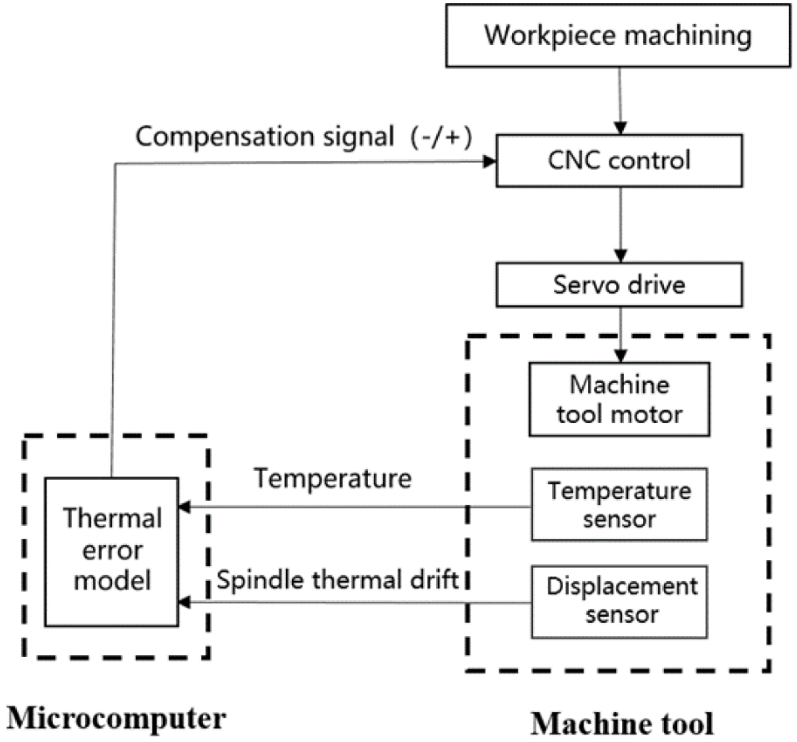

Intelligent spindle

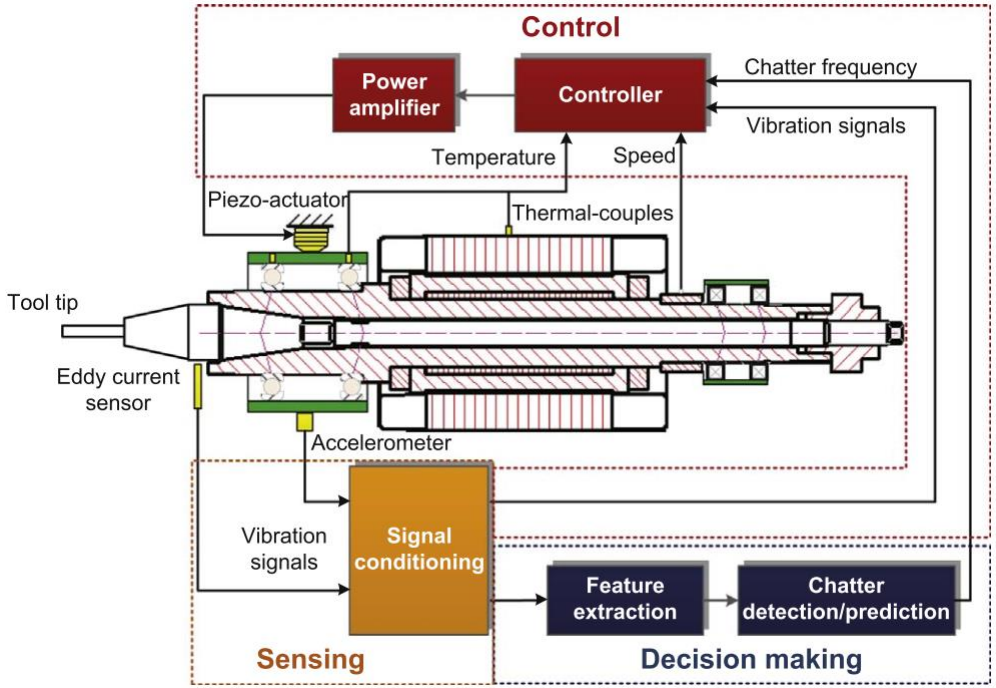

The development tendency of intelligent spindle has placed new demands on **real-time temperature** monitoring of the **entire spindle**.

Introduction:
Spindle temperature field modeling methods

Finite element analysis method

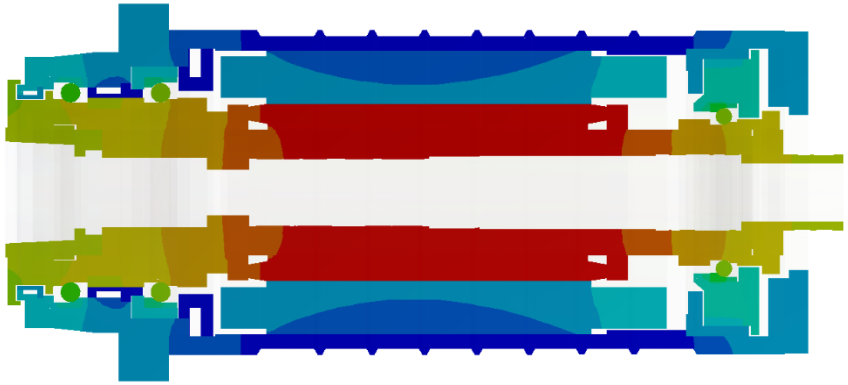

Thermal network method

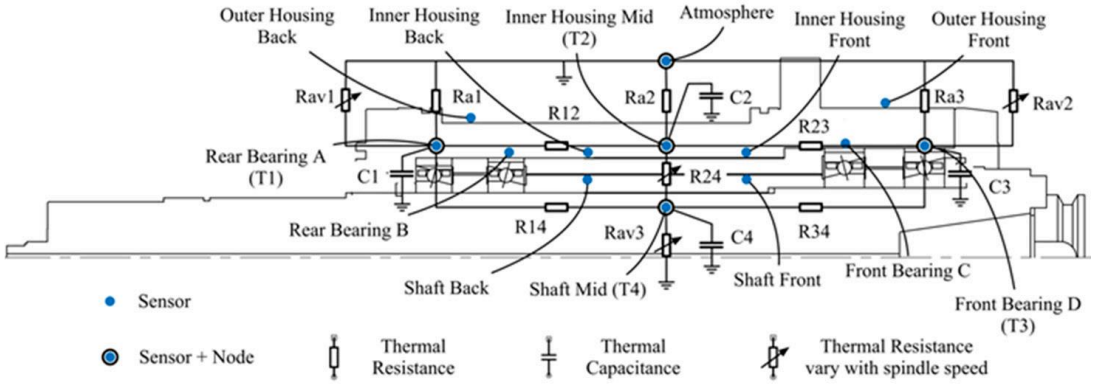

Bond graph method

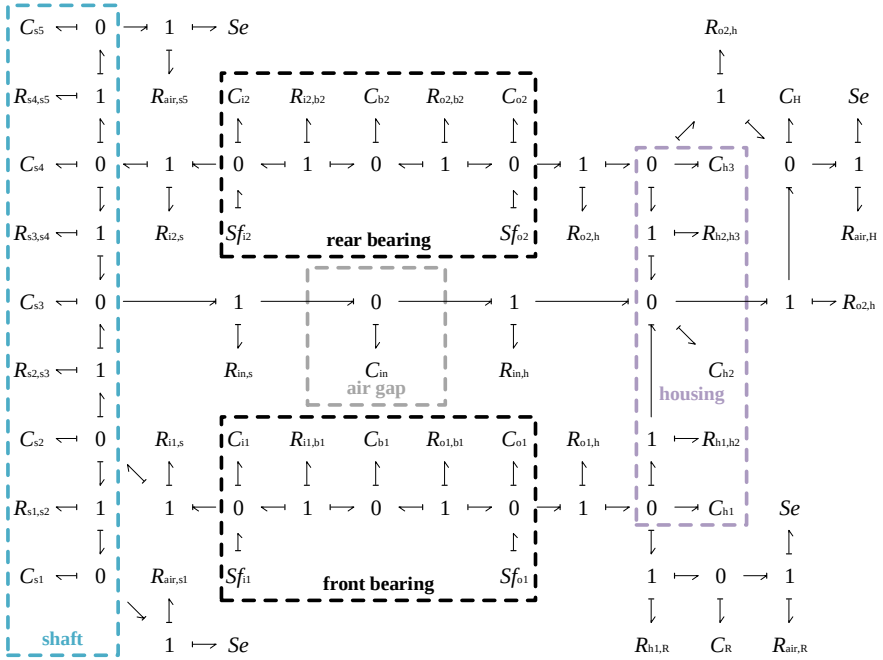

The **instantaneous temperature distribution** of **undetectable regions** inside the spindle, especially on rotating components, is difficult to obtain rapidly.

Data and mechanism fusion modeling approach

Real-time thermal characteristic model based on thermal network

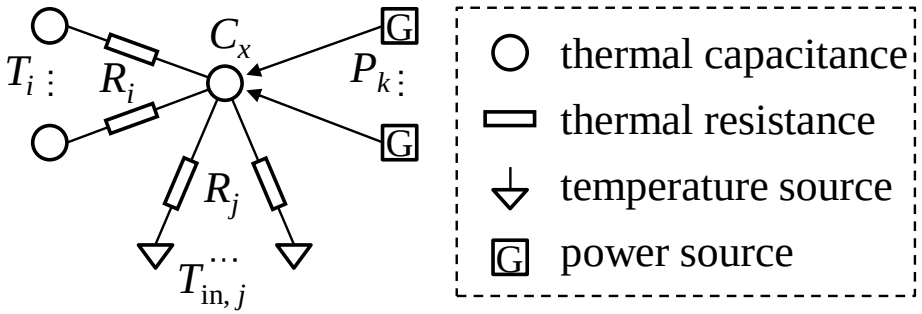

$$
\begin{cases}
\dot{\mathbf{x}}(t) = \mathbf{A}(t)\mathbf{x}(t) + \mathbf{B}(t)\mathbf{u}(t) \\
\mathbf{A}(t) = \mathbf{C}^{-1}(\mathrm{diag}(\mathbf{H}_{\mathrm{C}}(t)[1 \quad \dots \quad 1]^{\mathrm{T}} \\
\qquad + \mathbf{H}_{\mathrm{in}}(t)[1 \quad \dots \quad 1]^{\mathrm{T}}) + \mathbf{H}_{\mathrm{C}}(t)) \\
\mathbf{B}(t) = \mathbf{C}^{-1}\left[\mathbf{H}_{\mathrm{in}}(t) \quad \mathbf{M}_{\mathrm{in}}\right] \\
\mathbf{u}(t) = [\mathbf{u}_{\mathrm{T}}(t) \quad \mathbf{u}_{\mathrm{P}}(t)]^{\mathrm{T}}
\end{cases}
$$

Data-driven model parameter estimation

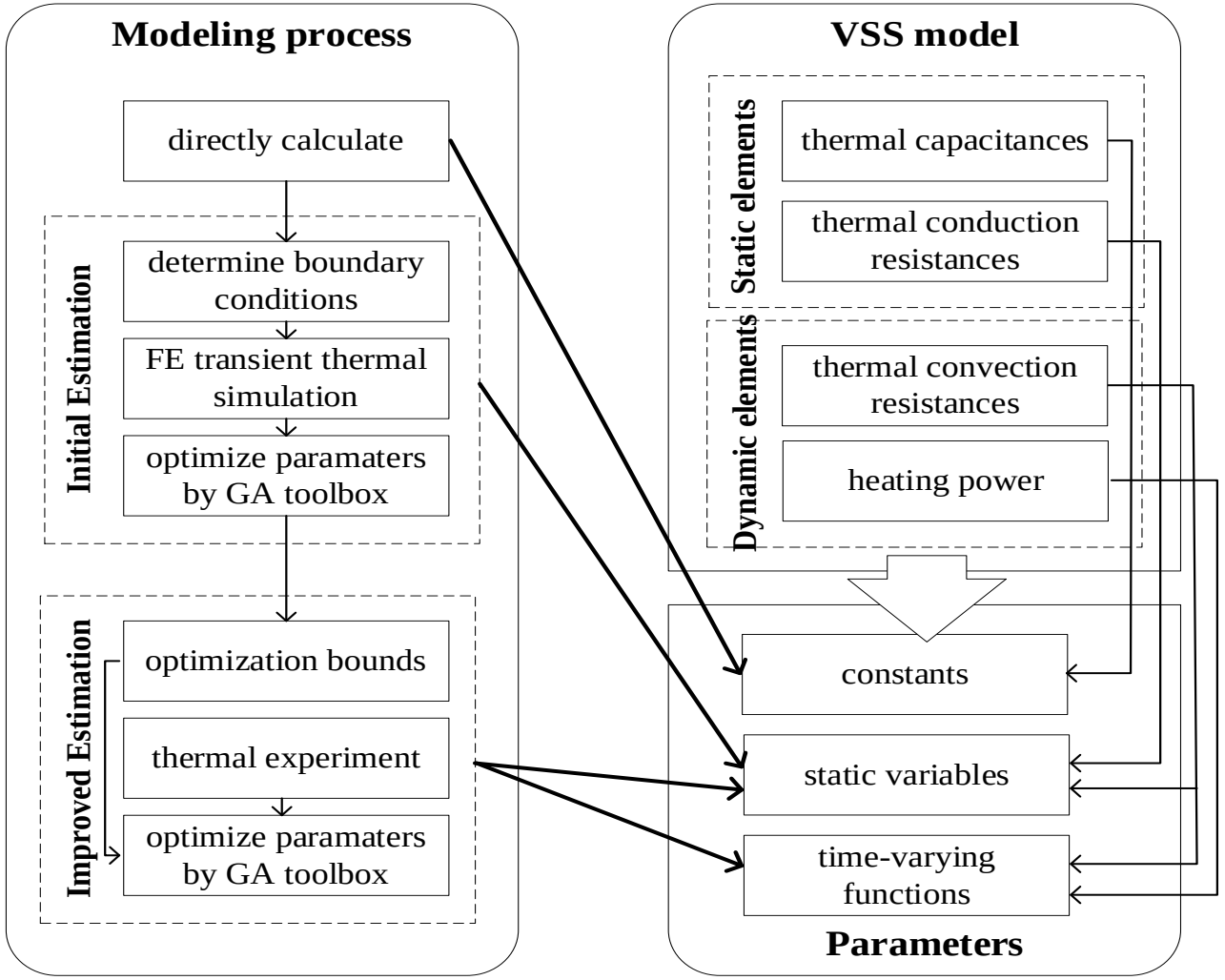

Case 1: application to a motorized spindle

Thermal network modeling of the motorized spindle

Structure of the motorized spindle

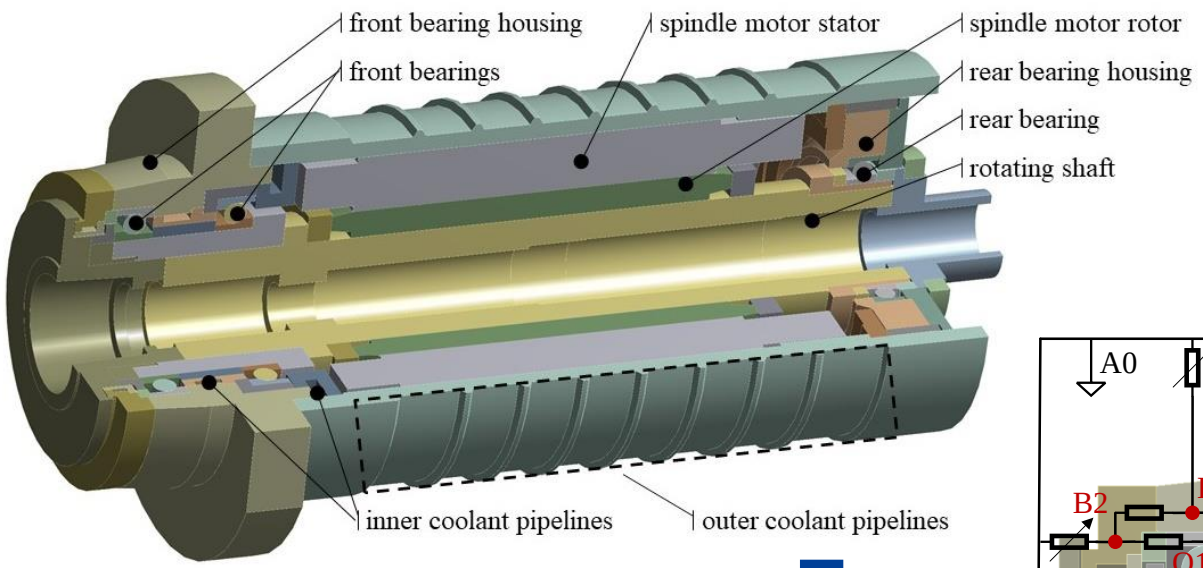

25 thermal capacitances,
29 conductive thermal resistances,
13 convective thermal resistances,
3 environment temperature sources,
4 heat generators

Thermal network

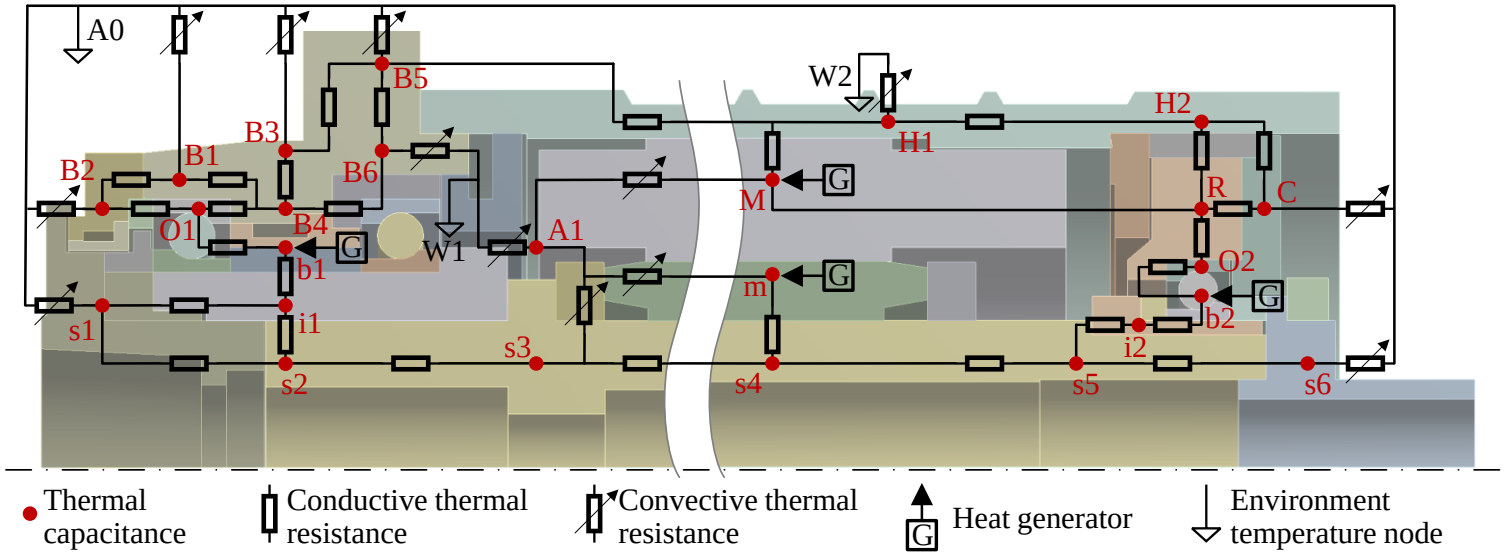

Case 1: application to a motorized spindle

Model parameter determination of the motorized spindle

Step 1: optimization using finite element simulation result

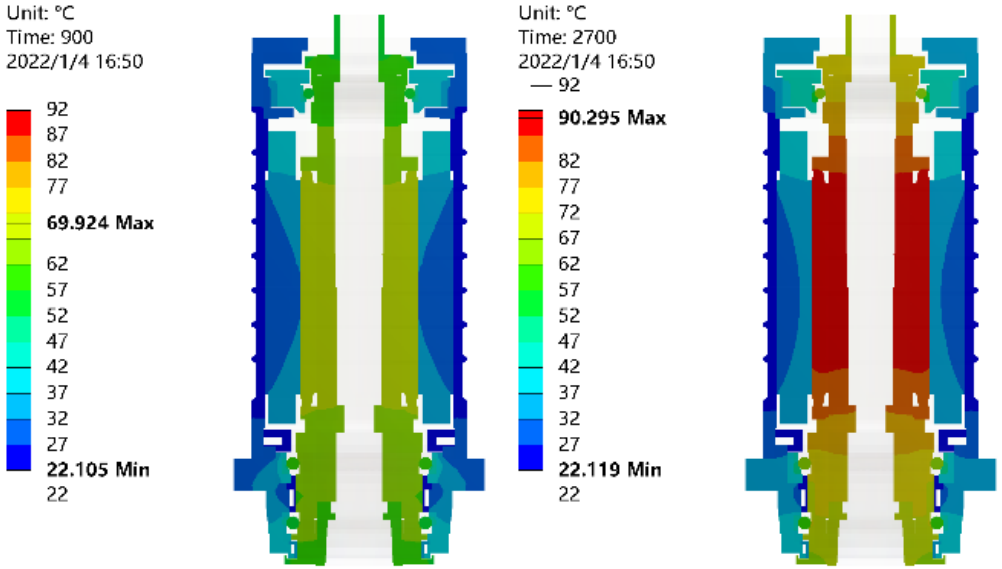

identify unknown static parameters

Step 2: optimization using thermal behavior testing data

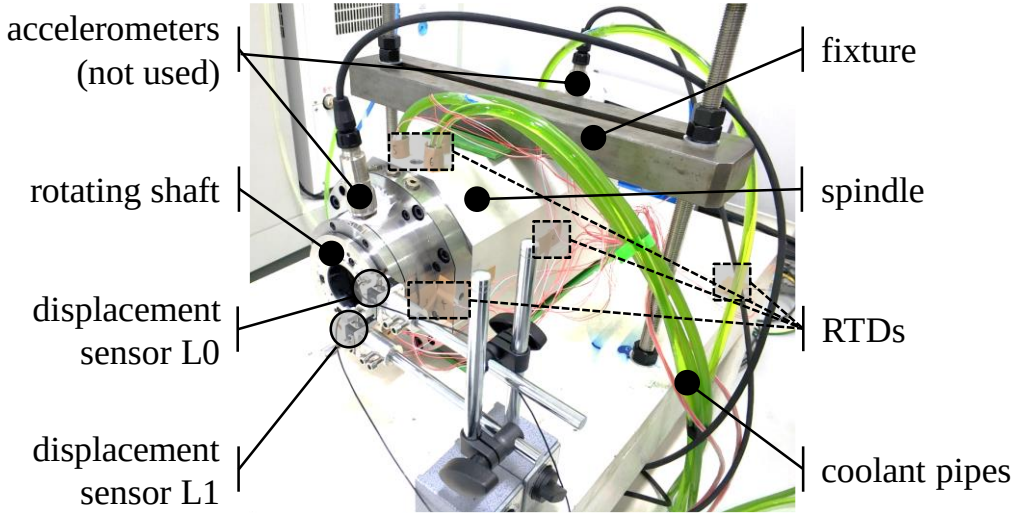

improve unknown static parameters & determine time-varying parameters

The average RMSE of 15 testing sets is 0.6443°C.

Case 1: application to a motorized spindle

Predicting accuracy verification in undetectable region

Temperature distribution measurement

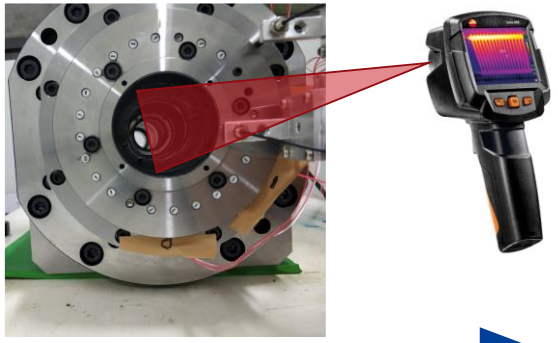

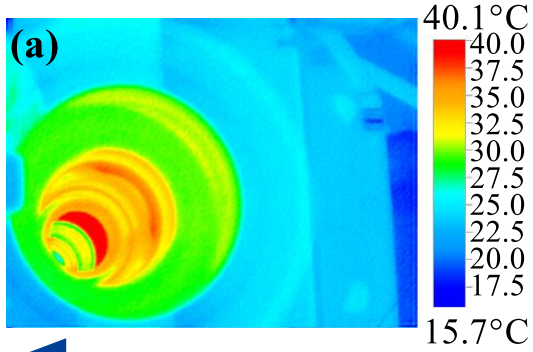

Affection of the reflected light

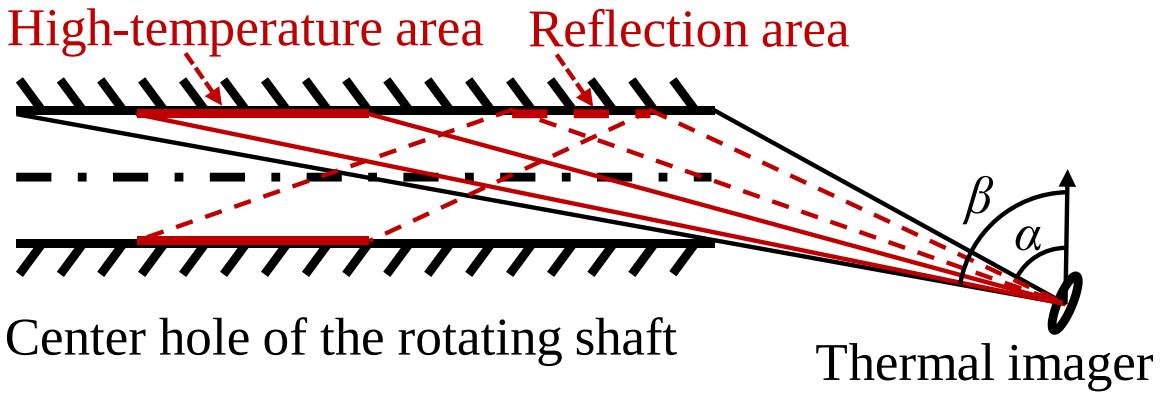

Comparison of estimated and measured temperature distribution

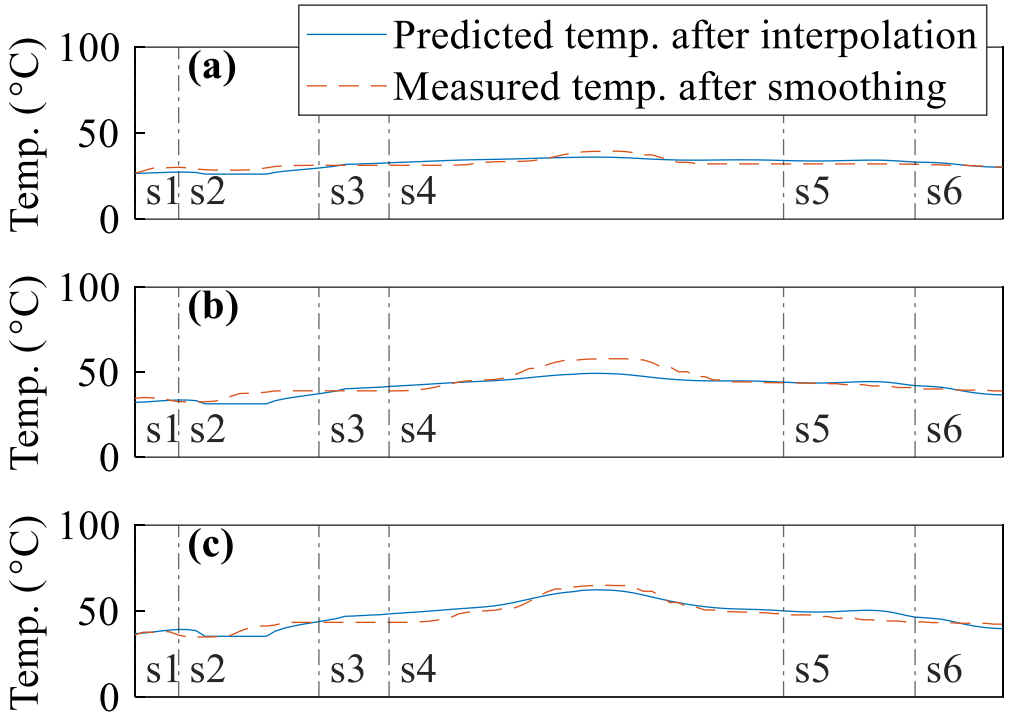

The average error is 2.96°C and the maximum error is 8.65°C.

Case 2: application to an external-driven spindle

Thermal network modeling of the external-driven spindle

The external-driven spindle

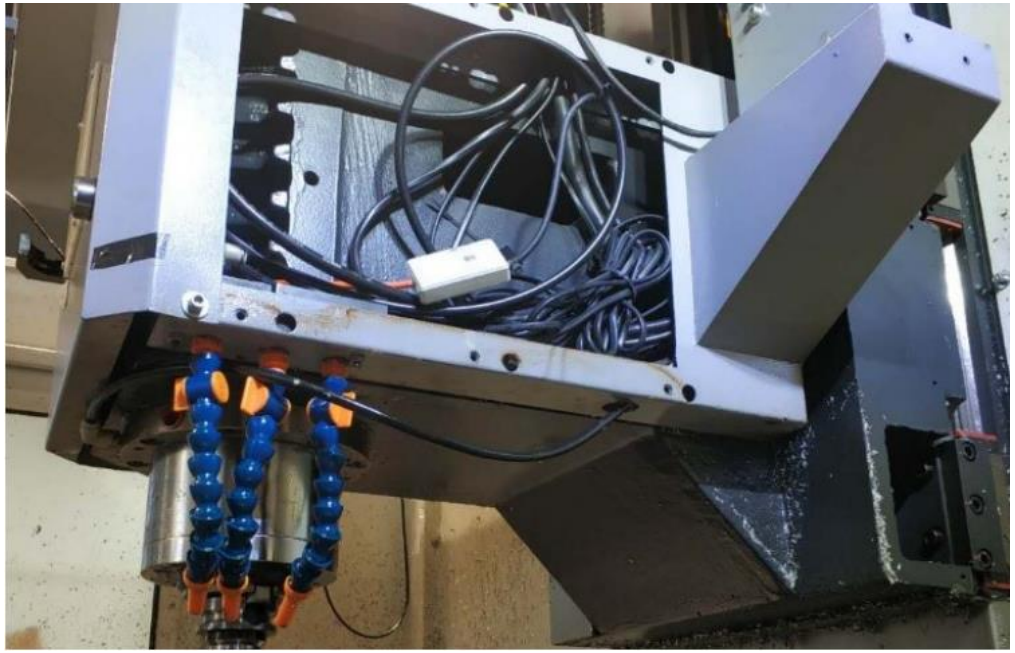

Thermal network

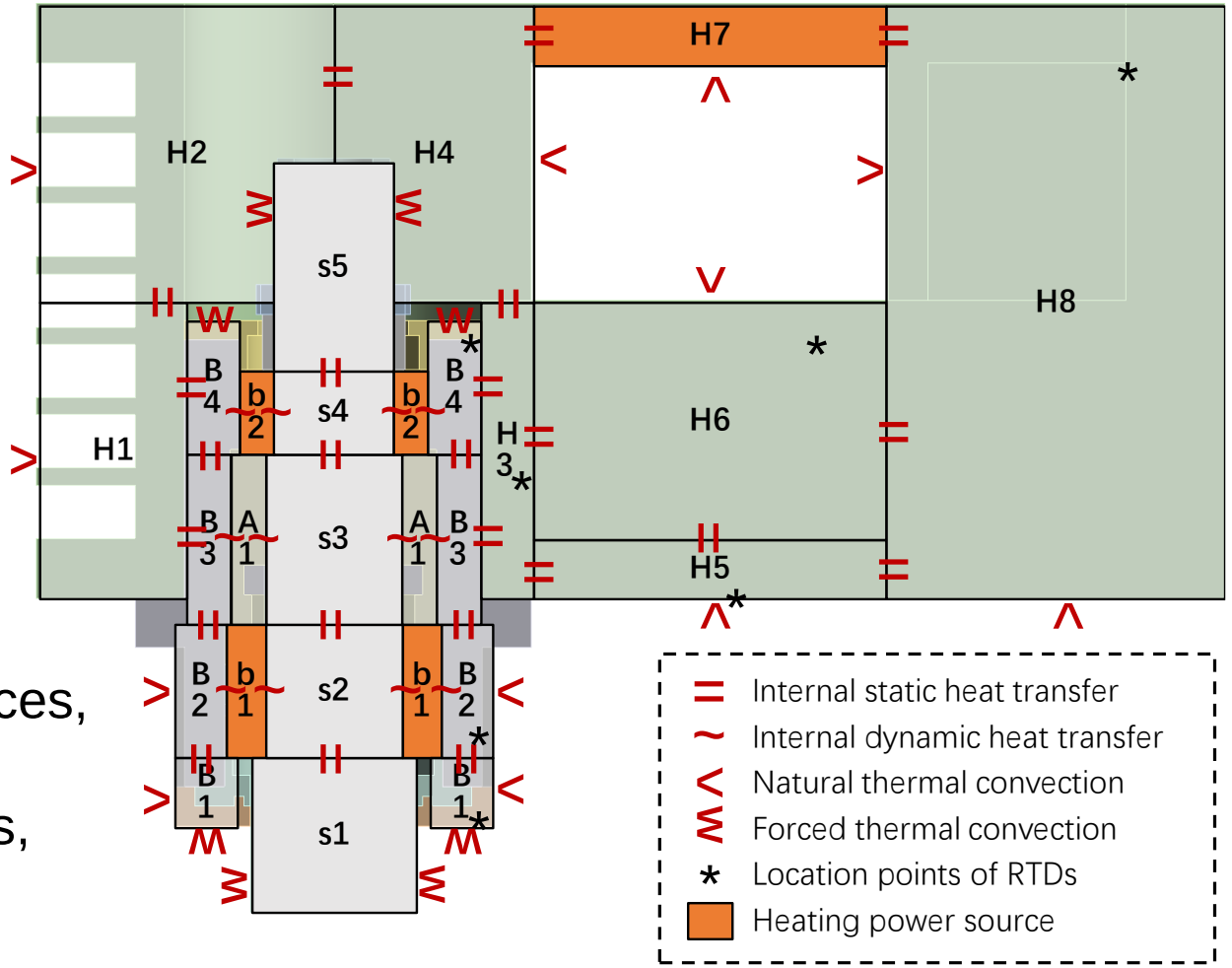

20 heat capacities, 3 power heat sources,
21 internal static thermal resistances,
6 internal dynamic thermal resistances,
8 natural convection resistances,
4 forced convection resistances

Case 2: application to an external-driven spindle

Model parameter determination of the external-driven spindle

Step 1: optimization using

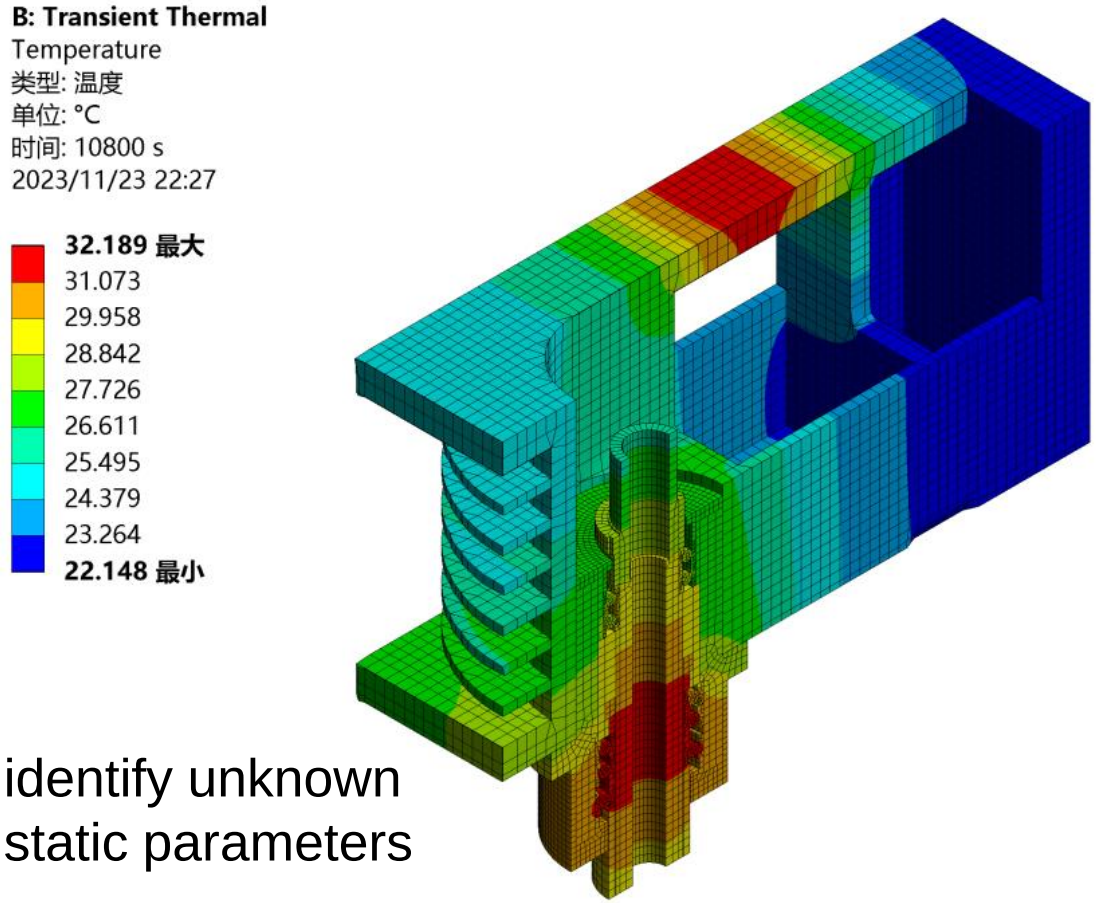

identify unknown static parameters

Step 2: optimization using thermal behavior testing data

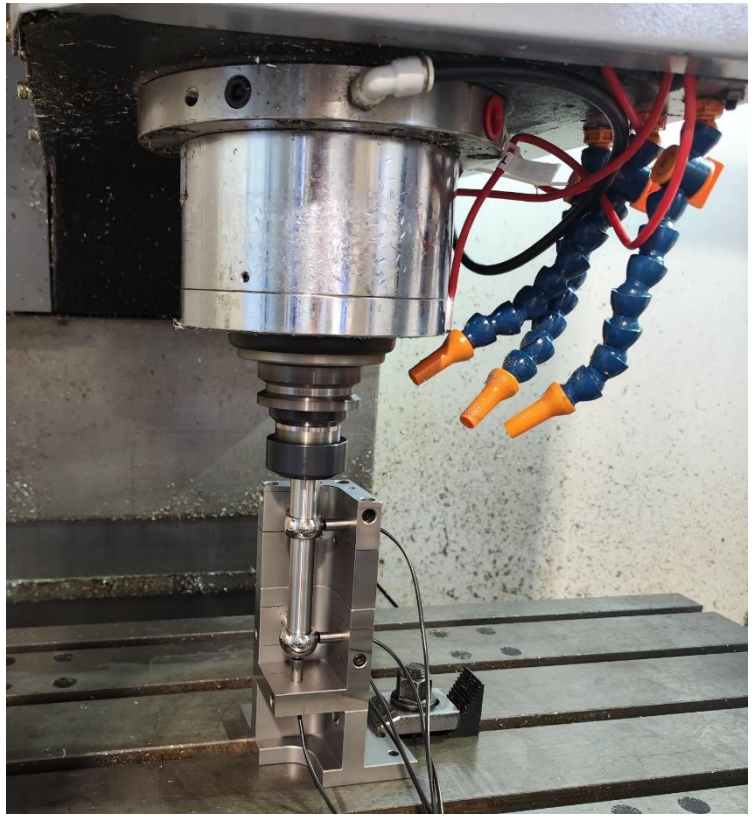

improve unknown static parameters & determine time-varying parameters

0.5457°C RMSE in the testing set

Case 2: application to an external-driven spindle

Thermal error model based on the predicted temperatures

Thermal error model

Using predicted temperatures
Z :6.87μm
Y1:5.67μm
Y2:5.66μm
X1:2.28μm
X2:1.85μm

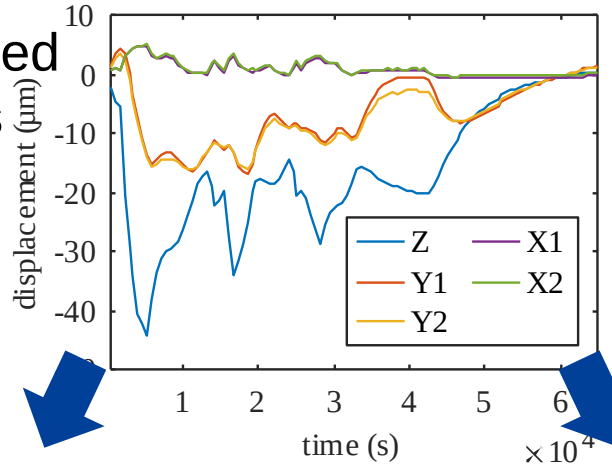

Traditional method
Z :9.30μm
Y1:9.03μm
Y2:8.58μm
X1:2.93μm
X2:3.16μm

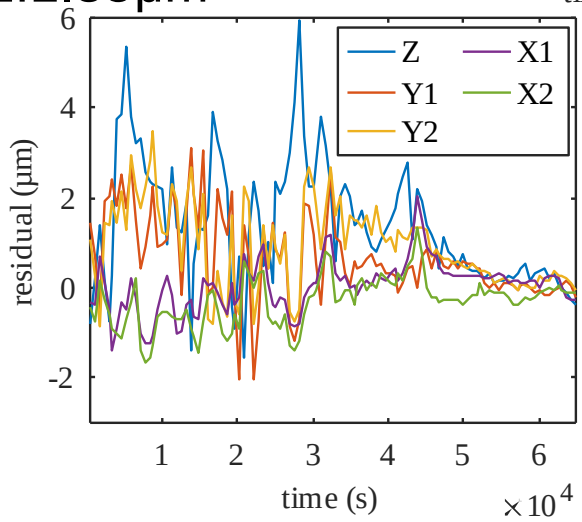

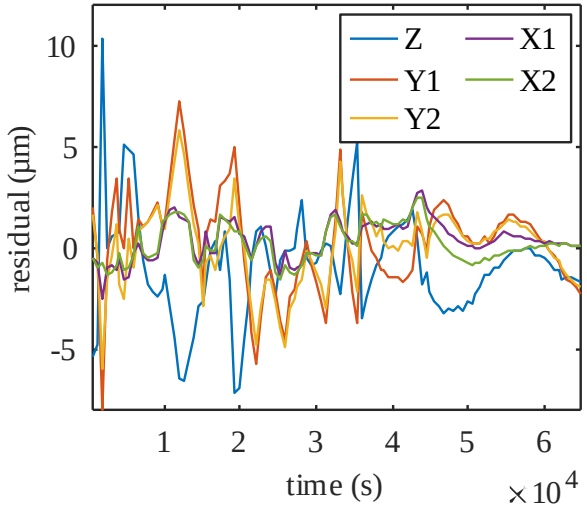

Machining verification experiment

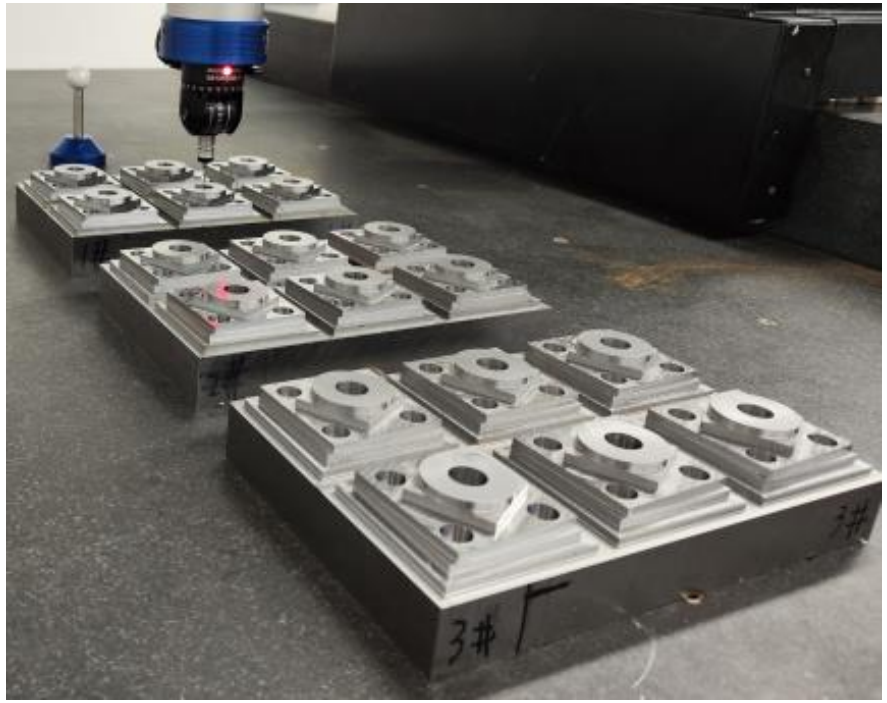

Using predicted temperatures: reduced **67.7%** machining error

Traditional method: reduced **61.1%** machining error

Conclusion

Estimation of undetectable region temperature
- with 2.96°C estimation error in average

Avoid placement of sensors on the spindle
- free from the troubles of wiring

High precision temperature prediction
- with 0.6443°C RMSE

Capability of real-time temperature prediction
- temperature update period < 1s

Improving thermal error compensation effect
- machining error reduction 61.1% ↗ 67.7%

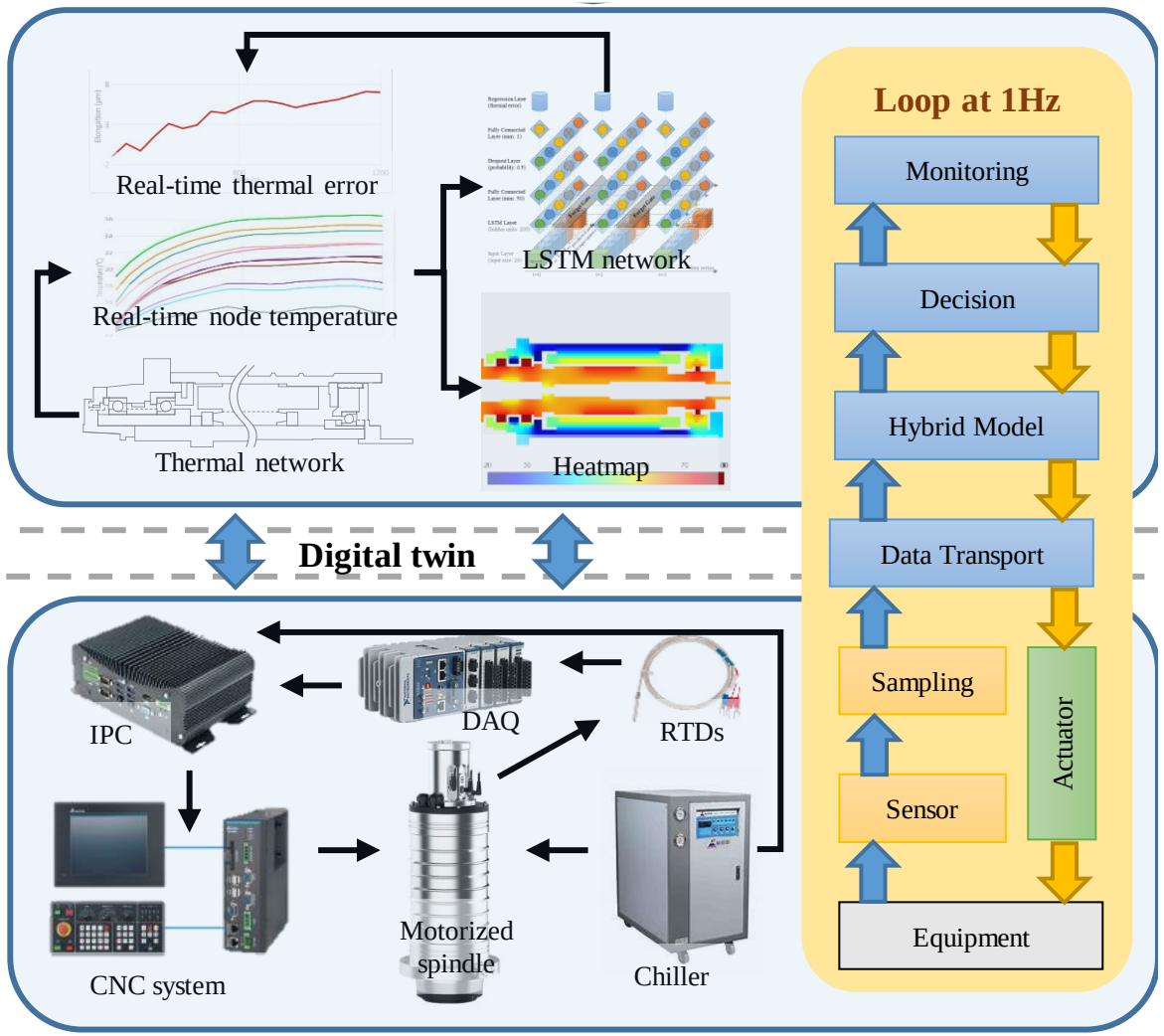

Thanks！