Special Interest Group meeting
Thermal Issues
Eindhoven, The Netherlands, March 2024
www.euspen.eu

Thermal error compensation considering coolant temperature of multi-tasking turning center

Seungmin Jeong[1,2], Hyeok Kim[1], Soyoung Je[1], Changho Lee[1], Kangjae Lee[1], Byung-Kwon Min[2]

[1] *DN Solutions, 40, Jeongdong-ro 162beon-gil, Seongsan-gu, Changwon-si, Gyeongsangnam-do, 51537, Republic of Korea*

2 School of Mechanical Engineering, Yonsei University, 50, Yonsei-ro, Seodaemun-gu, Seoul, 03722, Republic of Korea

Seungmin.jeong@dncompany.com

Abstract

A multi-tasking turning center is capable of executing various machining processes, offering enhanced productivity with features such as multi turrets and twin spindles. However, its structural complexity renders it vulnerable to thermal errors. For example, the heat generated in the tool holder during the milling process results in thermal deformation of the turret body. Fluctuations in environmental temperature and coolant temperature increases can further degrade machining accuracy. This study introduces a methodology for modeling and compensating for thermal errors in multi-tasking turning centers. The proposed approach involves conducting continuous experiments to assess machining accuracy, considering the heat generated in the tool holder and the impact of fluctuating coolant temperatures. Thermal errors and temperatures were measured using both water-based and oil-based coolant. By implementing the proposed compensation method, thermal errors were reduced by more than 50% in both conditions.

Thermal error, Multi-tasking turning center, Coolant,

1. Introduction

The demand for multi-tasking turning center are increasing because of their capability to perform multiple cutting processes simultaneously, which increases productivity and reduces costs. It has the advantage of multi-axis and multi-functional but multiple machining accuracy issues are encountered because of Internal and external heat sources. Up to 75% of errors of machined parts occur because of thermal effects [1].

To reduce the thermally induced error, various research on symmetrical design and machine part with low thermal expansion has been conducted [2]. In addition, thermal error control methods such as insulation and cooling of heat sources have been proposed [3]. Because commercial machine tools are equipped with a strong cooling system for the internal heat source recently, it is needed to focus on thermal errors caused by external heat sources. The indirect thermal error compensation method using a temperature sensor on the machine is frequently used because it is efficient and economical [4]. A significant amount of research was conducted, such as multiple linear regression analysis (MLR) [5], artificial neural networks (ANN) [6], transfer functions (TF) [7], and the finite element method (FEM) [8]. However, most studies only considered environmental temperature fluctuation. The coolant temperature varies because of environmental temperature fluctuations, cutting heat, and internal friction. It induced thermal deformation in the structure [9]. Therefore, coolant temperature must be considered together.

In most of the shop floor, not only does the environmental temperature change, but the coolant temperature also changes. During machining, coolant reduces friction, heat and extends tool life, and improves surface roughness. But if the coolant temperature is not controlled, it causes thermal error in the structure such as the turret body. It is difficult to install a chiller to control coolant temperature because of the large costs. Therefore, to improve machining accuracy, the coolant temperature must be considered together with the environmental temperature.

This study investigates a method to identify and compensate for thermal error caused by coolant and ambient temperature during continuous machining accuracy experiments of a multi-tasking turning center. The temperature changes and thermal error behavior are compared when water-based and oil-based coolant are used under the same program. Before and after compensation thermal error is evaluated using a multi linear regression model.

2. Experimental setup and conditions

In this study, a continuous machining accuracy experiment is proposed, including various conditions such as main spindle operation, axis movement, internal heat generation, changes in ambient temperature, and the use of coolant. The cycle time for the continuous machining accuracy experiments is approximately 3 minutes, which is shown in Table 1. The test lasts a maximum of 9 hours, including breaks between the 5th and 6th cycles for lunch or rest periods. The testing workpiece in the experiment enduring a continuous machining accuracy experiment cycle with a dry-run every hour and one cutting process per hour for a steel material with a diameter of 80mm is depicted in Figure 1.

During actual machining under the conditions of left spindle and upper turret (Path1) and right spindle and lower turret

(Path2), temperature data at each position is obtained through numerical control (NC). The thermal error data of the testing workpiece is measured using a micrometer.

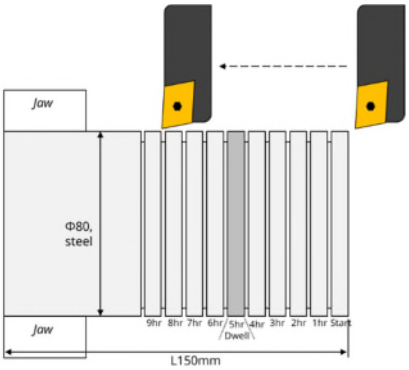

Figure 1. Testing workpiece

Table 1 Continuous machining accuracy experiments set-up conditions

	Continuous machining accuracy experiment program conditions
Target machine	Multi-tasking turning center
Dry-run program	Turning, Drilling, Grooving, Reamer, Chamfering, Reamer
Spindle speed (rpm)	230 ~ 1650
Feed rate (mm/rev)	0.07 ~ 0.35
Cycle time(min)	3
Coolant	Water-based or Oil-based

The coolants used in machining are generally classified into water-based and oil-based categories. These coolants reduce frictional heat during processing, thereby extending tool life and improving surface roughness. Water-based coolants are typically a mixture of water and oil, offering advantages such as excellent cooling properties and cost-effectiveness. However, they exhibit lower lubricity and detergency compared to oil-based coolants making fluid management challenging and leading to a shorter service life. Oil-based coolants characterized by excellent lubricating properties and long-term usability provide ease of fluid management. However, oil-based coolants induce health risks compared to water-based, generate more heat and make higher costs when used without dilution in water. The properties and specifications of both water-based and oil-based coolants used in this study are presented in Table 2.

Table 2 Property of coolant

	Water-based	Oil-based
Specific gravity (15/4℃)	0.96	0.87
Kinematic Viscosity (cSt.@40°C)	-	26
Coolant pump output	0.4 kW	
Coolant pump pressure	0.15 MPa	
Coolant tank capacity	310 L	

3. Compensation method

In order to build a compensation model, the selection of the optimal temperature sensor position is crucial. The optimal sensor position is determined experimentally, then, a comprehensive compensation model is developed.

3.1. Positions of temperature sensor

The sensor position was determined using an experimental method. Each machine tool structure was equipped with twenty temperature sensors. Temperature sensors were installed to measure internal heat generation, environmental temperature variation, and coolant temperature variation. Temperature sensors were selected using continuous machining accuracy experiments under with and without coolant conditions. By correlation analysis, eight positions with a high correlation between temperature and displacement were determined as compensation sensor positions. The positions of the eight temperature sensors are shown in Table 3.

Table 3 Position of the temperature sensor on the machine

Symbol	Position	Symbol	Position
S1	Left Spindle Front Bearing	**S5**	Lower Milling Drive Bearing
S2	Bed Rear Middle	**S6**	Right Spindle Front Bearing
S3	Bed Front Lower	**S7**	Upper Turret Body
S4	Ambient Air Block	**S8**	Lower Turret Body

3.2. Thermal error modelling

The coefficients of the MLR model are defined using the displacement data and temperature data from the continuous machining accuracy experiments. The MLR model is as follows.

$$\delta_{path.1} = \alpha_0 + \sum_{i=1}^{N} \beta_i \cdot (T_i' - T_{offset}), \qquad (1)$$

where α_0 is the constant value, and T_{offset} is 20℃ which is the reference machine temperature. Path1 is a cutting process condition using the upper turret and left spindle. Path2 is a cutting process condition using the lower turret and right spindle. Fig. 2 presents the configuration of the turning center. In the case of path1, five temperature sensors of S1, S2, S3, S4, and S5 were used as a model for compensation. In the case of path2, six temperature sensors of S2, S3, S4, S6, S7, and S8 were used.

Each temperature sensor has a sensitivity of 0.1 ℃ and acquire temperature data within the NC controller. Temperature data is used as a variable in the MLR compensation model. NC controller calculates compensation values independently for Path1 and Path2 based on real-time temperature variations.

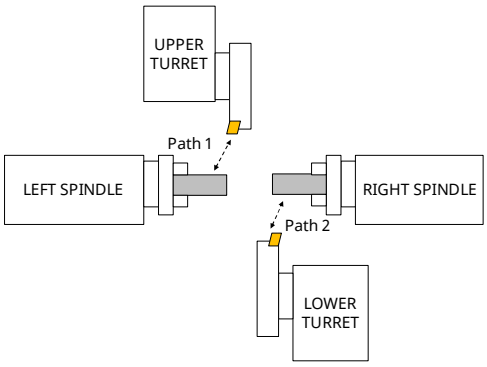

Figure 2. Configuration of multitasking turning center

3.3. Results

When conducting continuous machining accuracy experiments using water-based coolant, the coolant

temperature tends to increase by approximately 5℃. On the other hand, when using oil-based coolant, the temperature rises by approximately 15℃, which is more than three times higher compared to water-based coolant. The reason is the lower specific heat of oil-based coolant. It causes a significant temperature to increase even under the same heat generation conditions. Additionally, high-viscosity oil-based coolant get a substantial rise in coolant temperature due to increased frictional heat generated by channel resistance. It led to a 10℃ temperature increase compared to water-based coolant.

The case of using oil-based coolant led to an elevation in internal temperature. However, when the operation stops, a rapid internal temperature fluctuation of over 5 ℃/h occurs. This fluctuation of internal temperature leads to unstable machining conditions. All cases of coolant temperature fluctuation are shown in Fig 3.

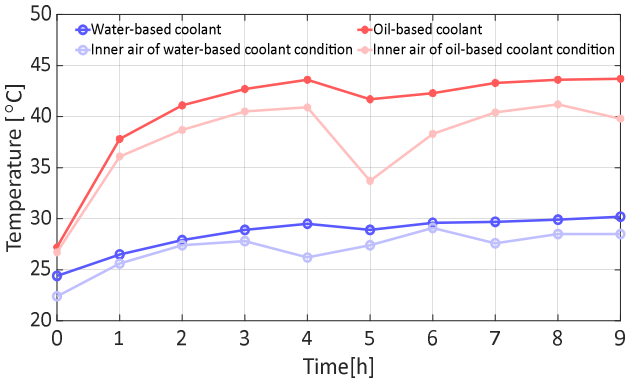

Figure 3. Coolant and inner air of the cutting room temperature variation for each coolant condition under conditions of continuous machining accuracy experiments

Four sets of the tests were conducted for before and after compensation tests under different coolant conditions. The average value of each test was shown in Fig 4. In case of using water-based coolant condition, the temperature of coolant increased by 5 ℃. After compensation, the maximum thermal error of path1 and path2 were reduced from 19 µm, 30 µm to 13 µm, 14 µm respectively. In case of using oil-based coolant condition, the temperature of coolant increased by 15 ℃. After compensation, the maximum thermal error of path1 and path2 was reduced from 59 µm, 75 µm to 31 µm, 32 µm respectively.

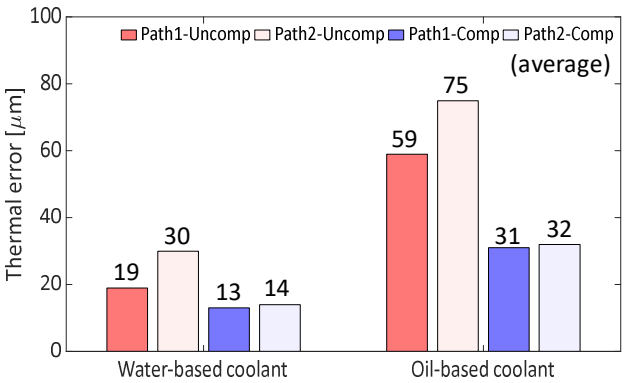

Figure 4. The results of thermal error before (Uncomp) and after compensation (comp) of the path1 and path2 under using a water-based coolant and oil-based coolant

4. Conclusion

In this study, we have developed a thermal error model of a multi-tasking turning center by conducting continuous machining accuracy experiments, taking into account tool holder heating and the impact of coolant temperature fluctuations. Additionally, we have developed a real-time thermal error compensation function to address thermal variations during simultaneous cutting operations. Then, we applied the thermal error compensation under varying thermal characteristics induced by different coolant conditions, using strategically selected temperature sensor positions and the MLR compensation model. The test results demonstrated that the thermal errors for the multi-tasking turning center under different coolant conditions can be reduced by 50% or more.

References

[1] Mayr J, Jedrzejewski J, Uhlmann E, Donmez M. A, Knapp W, Härtig F, and Wegener K 2012 Thermal issues in machine tools *CIRP annals,* **61**(2), p 771-791

[2] Putz M, Richter C, Regel J and Bräunig M 2018 Industrial consideration of thermal issues in machine tools *Production Engineering*, **12** p 723-736

[3] Mares M, Horejs O, Fiala S, Havlik L and Stritesky P 2020 Effects of cooling systems on the thermal behaviour of machine tools and thermal error models *Journal of Machine Engineering,* **20**

[4] Ramesh R, Mannan M A and Poo A N 2000 Error compensation in machine tools—a review: Part II: thermal errors *International Journal of Machine Tools and Manufacture*, **40**(9), p 1257-1284

[5] Chen J S 1996 A study of thermally induced machine tool errors in real cutting conditions *International Journal of Machine Tools and Manufacture*, **36**(12), p 1401-1411

[6] Mize C D and Ziegert J C 2000 Neural network thermal error compensation of a machining center *Precision Engineering*, **24**(4), p 338-346

[7] Horejs O, Mares M, Kohut P, Barta P and Hornych J 2010 Compensation of machine tool thermal errors based on transfer functions *MM Science Journal*, **3**, p 162-165

[8] Mayr J, Ess M, Weikert S, and Wegener K 2009 Compensation of thermal effects on machine tools using an FDEM simulation approach *Proceedings Lamdamap*, **9**

[9] Mayr J, Gebhardt M, Massow B B, Weikert S, and Wegener K 2014 Cutting fluid influence on the thermal behavior of 5-axis machine tools *Procedia CIRP*, **14**, p 395-400