euspen's 23rd International Conference & Exhibition, Copenhagen, DK, June 2023
www.euspen.eu

Robust mass dampers: the development of a low-cost, broad-banded solution to improve vibration stability on the nanoscale

Scott Beamish[1], Jemima Poynton[1], Thomas Thomas[1], Julia Parker[1], Jon Kelly[1*]

Diamond Light Source Ltd, Harwell Science and Innovation Campus, Didcot, Oxfordshire OX11 0DE, UK

Correspondence e-mail: Jon.kelly@diamond.ac.uk

Abstract
Stability is critical in dictating the performance of many high-precision motion systems, including the quality of the data collected on synchrotron beamlines. Conventional passive techniques to reduce vibrations, such as tuned mass dampers, are only effective over a very narrow frequency range, whereas active damping techniques can be complex, expensive and consume valuable real-estate in crowded environments. This paper presents the implementation of a broad-banded passive damper, referred to as a robust mass damper (RMD), to a 3-axis sample scanning stage in beamline I14 at The Diamond Light Source. The RMD was positioned on the interferometer support to reduce the mechanical resonances and hence enable a higher bandwidth control. RMS position jitter was reduced in all directions, from 3.3 nm to 1.9 nm in the X-direction, 1.4 nm to 1.2 nm in the Y-direction and 9.4 nm to 6.0 nm in the Z-direction. Also, the controller proportional gain could be increased from 2000 to 2400 and derivative increased from 500 to 700. This resulted in an improvement in image quality and enabled faster raster scanning speeds.

Keywords: Vibration, Stability, Damper, Synchrotron, Motion Stage

1. Introduction

Damping is the reduction of the amplitude of vibrations through dissipation of kinetic energy. Optimising damping can have an array of benefits in motion systems as maximum controller gain is limited by the dynamic properties of the assembly. For example, in scanning stages both image quality and scanning speed can be improved with better stability [1].

All materials in a structure have some level of intrinsic damping. For example the damping ratio of a continuous aluminium structure is approximately 0.005% [2], compared to 0.02% for steel [3] and 5% for natural rubber [4]. Also, bolted joints typically provide more damping than equivalent welded joints [4]. As such, selecting certain materials and joint designs can improve stability without requiring additional hardware. Similarly, the stiffness of a system may be increased to push the resonant frequencies above those driven by the system or environment. However, relying on intrinsic damping means compromising the design via material choice or including additional support structures. Thus, stability improvements are often limited [1].

Active damping can be far more effective, these methods apply a reactive force to resist the motion of the vibrating system. This can operate over a wide range of frequencies which enables it to target multiple resonance modes [5]. However, this approach is often limited by electrical noise, requires additional control hardware, which is often expensive, requires specialist knowledge to implement and can be difficult to keep compact.

Passive solutions are often a simpler design. Among the most popular passive technologies are tuned mass dampers (TMDs). A TMD consists of a mass mounted on springs and dampers. The damping effect can be achieved via several approaches, including viscous dashpots, eddy currents and material damping. The stiffness of the spring is tuned to the target frequency. This is done such that the motion of the TMD directly opposes that of the structure—making them 180° out of phase [6]. This can work well when there is one dominant resonant mode to be damped. However, TMDs are sensitive to changes in parameters that may affect the natural frequencies of the structure. As such, if the system changes its mass or stiffness, such as via installation of new hardware, adding mass or modification of existing hardware, the effectiveness of the damper could be compromised or even have a detrimental effect. Also, more complex structures often have multiple resonant frequencies that must be targeted separately.

A robust mass damper (RMD) operates on similar principles to that of a tuned mass damper, however an RMD takes advantage of the frequency-dependent behaviour of a fluid under shear, namely how the stiffness changes. This enables it to provide broad-band damping, rather than targeting a single frequency.

The velocity-dependent damping force is produced by the sliding plate principle, which induces a shear flow [1]. This is achieved by filling a flexible encapsulation with high-viscosity linear viscoelastic (LVE) fluid. This fluid flows between moving fins and slots, also contained within the encapsulation. The spring force is produced by parallel leaf springs on which a moving mass is suspended. A schematic of the RMD applied in this study is presented in Figure 1.

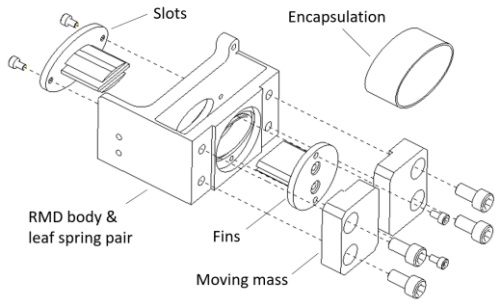

Figure 1. Exploded view schematic of the robust mass damper applied in this study to a synchrotron beamline sample stage.

RMD's were first introduced by Verbaan in 2015 and applied to a motion stage used in the manufacture of integrated circuits [1]. Although the performance was greatly improved, the technology was not adopted due to the risk of oil leakage in a UHV system. RMD's may offer a simple but effective solution in many high precision systems where stability is key.

This work applies an RMD to a three-axis x-ray microscopy sample scanning stage installed in a beamline I14 at the Diamond Light Source synchrotron [7], with the aim to reduce position jitter, thereby enhancing image quality. Jitter in this context refers to the fluctuation in the position of the stage, as measured by the laser interferometers. This study also serves to assess the effectiveness of RMD's in a broader sense, as they have the potential to be applied to a wide range of static and dynamic systems where stability is key.

2. Robust Mass Damper Development Process

2.1. Fluid Characterisation

The stiffness and damping characteristics of a fluid are required to determine the optimum RMD geometric parameters. Thus, these fluid properties must be obtained as the first step in any RMD development. In this work a pure silicone oil with a dynamic viscosity of 500 000 cSt at 25°C (Core-RC 500k cSt Silicone Oil), with unknown LVE properties, was selected.

The linear viscoelastic (LVE) behaviour of a fluid can be modelled by a spring and damper in series – a Maxwell element [1]. An arbitrary number of Maxwell elements can be combined in parallel to capture the different fluid modes and their associated behaviours, as shown in Figure 2. In this study, modelling four elements was found to be appropriate, with five or more elements introducing additional model complexity with no further significant changes in modelled damping properties over the frequency range of interest (1 Hz to 600 Hz).

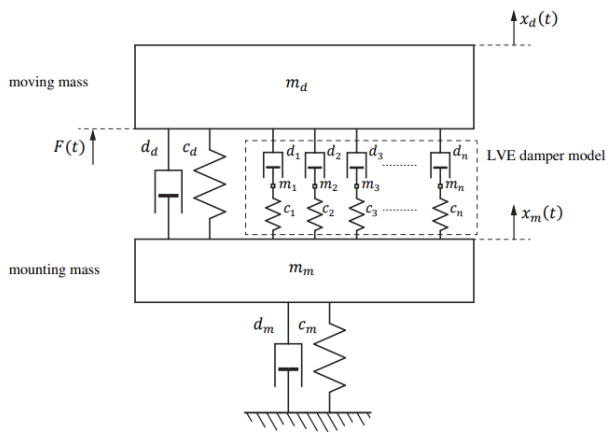

Figure 2. Maxwell model of an RMD for the purposes of testing under excitation to determine fluid damping properties [1].

These Maxwell element values were determined by using a prototype RMD as a sliding plate rheometer, photographed in Figure 3. The RMD was excited by a voice coil over a stepped frequency sweep of pure sine waves between 1 Hz and 1000 Hz and deflection was measured via a capacitive sensor. This provided a frequency response function, which could then be fitted against a maxwell model. The model fitting was achieved using a hybrid optimisation process combining a genetic algorithm with a Nelder-Mead method in MATLAB. The genetic algorithm effectively determines the approximate parameters, whilst overcoming the issue of local minima [1]. The Nelder-Mead algorithm is then applied as it converges to the optimum values more efficiently. Figure 4 shows the measured frequency response function of the characterisation rig against its corresponding model fit, which is a sum of the four maxwell element contributions. The calculated Maxwell element stiffness and damping values are presented in Table 1.

Table 1. Maxwell element stiffness and damping terms for a 500 000 cSt pure silicone oil.

	Mode 1	Mode 2	Mode 3	Mode 4
Stiffness (N/m)	1.064e5	1.868e5	3.374e8	5.374e10
Damping (Ns/m)	1.964e3	279.5	3.177	0.298

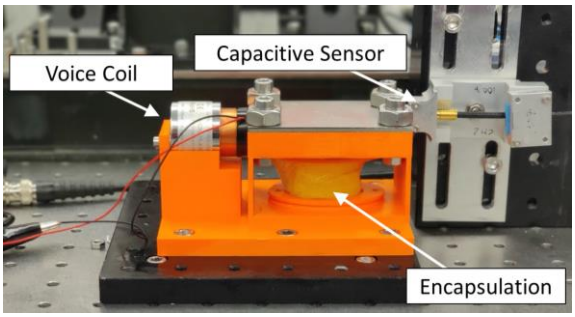

Figure 3. Photograph of LVE fluid characterisation rig, used to determine the Maxwell element stiffness and damping terms.

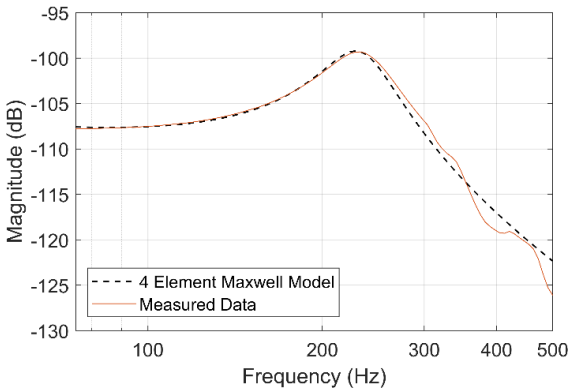

Figure 4. Measured frequency response function for 500 000 cSt pure silicone oil, compared against a fitted 4 element Maxwell model.

2.2. Parameter Optimisation

Prior to RMD installation, the position jitter of the sample scanner in the raster directions was 3.6 nm RMS in X and 1.2 nm RMS in Y. The less critical Z direction jitter was 9.4 nm RMS. The key positioning limitation is the floor vibration disturbance rejection of the motion control. The control bandwidth is limited by the mechanical stability of the interferometer feedback support. The Z direction bandwidth is not high enough to reject the dominant 50 Hz & 100 Hz floor vibration peaks. Time and frequency domain measurements for each direction are presented in Figure 5 and Figure 6 respectively.

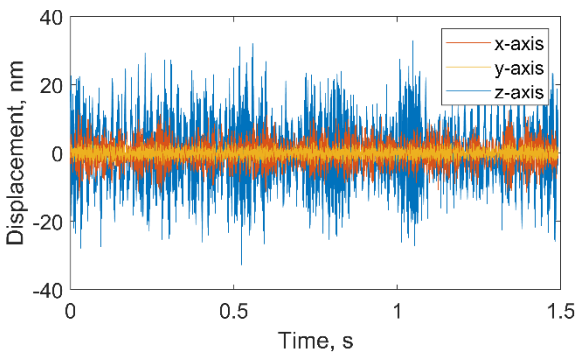

Figure 5. Position jitter of the sample stage when in closed loop measured by the stage feedback interferometers.

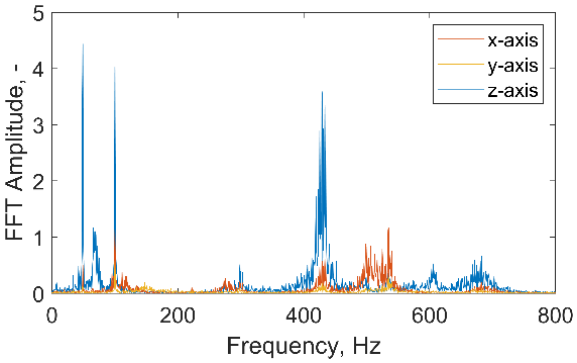

Figure 6. Fourier transform of the measured displacement for the sample stage, highlighting the dominant resonance modes.

Before parameters could be optimised, a model of the entire system had to be determined. A modal analysis of the undamped sample stage was performed in ANSYS, an output of which is presented in Figure 7. This figure shows the fourth resonance mode, with a frequency of 414.9 Hz, which aligns with the measured resonant peak observed in the Z-direction in Figure 6. The majority of the first 10 modes had a strong Z direction component. RMD's, like many damping solutions, primarily target a single axis and as such the dominant Z-direction peak was selected.

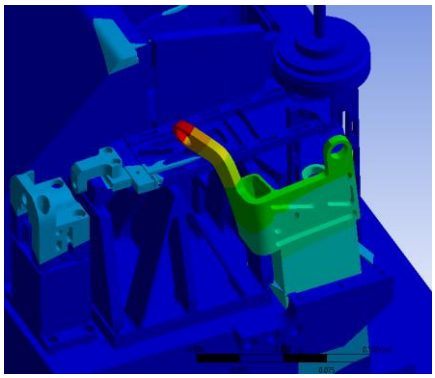

Figure 7. ANSYS model analysis of sample scanning stage, showing the deformation from the fourth resonance mode at 414.9 Hz.

Systems and their outputs in response to input can be represented in state-space form as given in equations (1) and (2):

$$\dot{\underline{x}} = A\underline{x} + B\underline{u} \tag{1}$$

$$\underline{y} = C\underline{x} + D\underline{u} \tag{2}$$

where x is the state vector, y is the observation vector (the output of the system), and u is the control vector (the input to the system).

A state-space reduced order model (ROM) was output from ANSYS™ using ADPL commands. The RMD state-space was then derived from a Maxwell model in MATLAB.

The state space models are combined so that the damper properties are optimised to minimise interferometer support oscillation at resonance. This model is like that used to characterise the fluid, albeit rather than a force input being related to the motion of the moving mass, the movement from the ground is instead related to the output force from the ROM.

This process provides the ideal leaf spring stiffness and damping force to optimally supress the selected resonances. As the damper is effectively a set of parallel plates in relative motion, the damping force is proportional to the area of the fins and effective gap between each fin and slot. This ratio is known as the geometric damping factor (GDF) and can be expressed via the following:

$$GDF = \frac{2nlw}{h} = \frac{A}{h} \tag{3}$$

Where n is the number of fins, l is the fin length, w is the fin width, h the is effective gap between the fins and slots and A is total area of all the fins.

Any reasonable and manufacturable RMD dimensions which achieve this GDF would be suitable. The geometric values selected are shown in Table 2. The predicted improvement in damping performance is shown in Figure 8.

Table 2. Optimised RMD geometry and moving mass values.

Damper Dimension	Value	Unit
Number of fins	2	-
Fin height	19	mm
Fin length 1	24.4	mm
Fin length 2	19.5	mm
Effective gap	120	µm
Geometric damping factor	17.5	m
Leaf spring stiffness	258	kN/m
Moving mass	0.17	kg

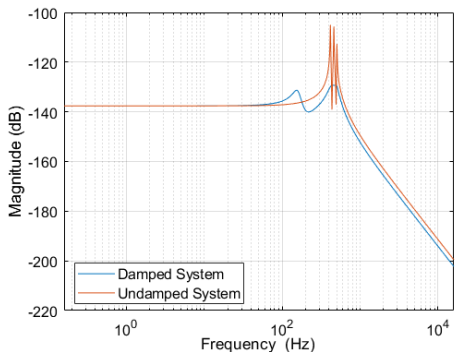

Figure 8. Frequency response functions for the modelled system both with and without an RMD installed, showing the predicted improvement in damping performance.

2.3. Manufacture and Installation

The RMD body, fins and slots were manufactured from PLA using FDM 3D printing. This allowed the body and mounting interface to be a complex monolithic geometry at low cost compared to conventional reductive manufacturing techniques. The encapsulation material was 75 µm polyurethane tubing, selected due to its negligible stiffness relative to the leaf spring pair and excellent impermeability. The RMD was fitted to the sample stage using three pre-existing mounting holes. The moving mass was steel, due to its high density, minimising the overall size of the RMD.

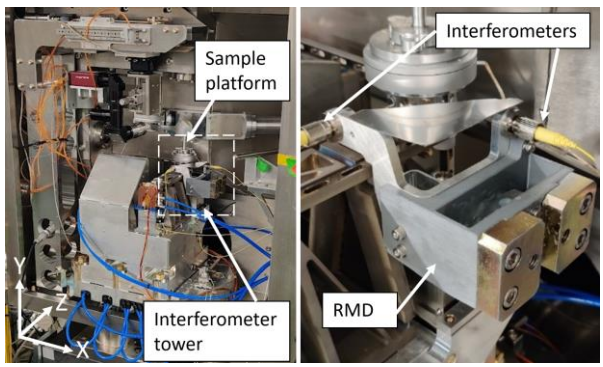

Figure 9. Robust mass damper installed on the sample scanner interferometer position feedback support.

3. Results

The original position jitter and the new reduced jitter post RMD installation and control bandwidth increase are given below in Figure 10 and Figure 11.

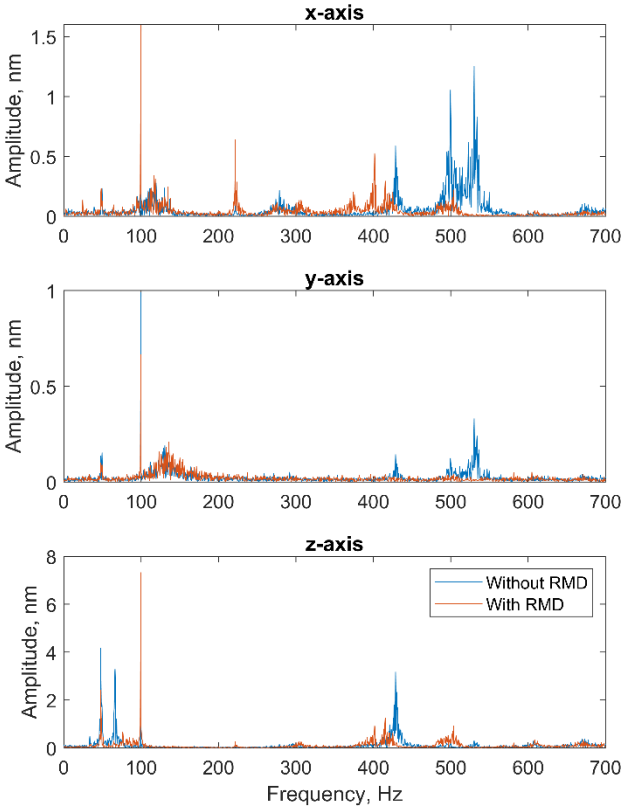

Figure 10. Frequency domain comparison with and without the RMD installed. Measured in the X, Y, and Z directions.

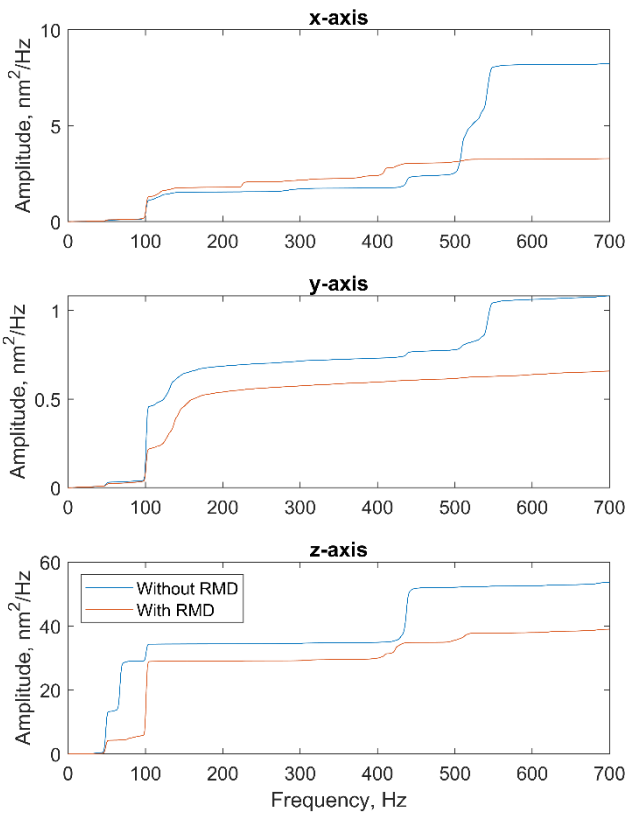

Figure 11. Cumulative power spectrum comparison of sample stage stability with and without the RMD installed. Measured in the X, Y, and Z directions.

The RMS position jitter was reduced in all directions, from 3.3 nm to 1.9 nm in the X-direction, 1.4 nm to 1.2 nm in the Y-direction and 9.4 nm to 6.0 nm in the Z-direction.

FFT amplitude was reduced in all directions between 350 and 600 Hz, the target frequency of the RMD, with peak amplitude in this range reducing by 58.0%, 79.2% and 60.3% in the X, Y and Z directions, respectively. The reduction in interferometer support resonance over this range enabled the controller gains to be increased from 2000 to 2400 and derivative increased from 500 to 700. Figure 11 shows a reduction in amplitude at the 50 Hz and 100 Hz frequencies in the Y and Z direction.

Damping effectively over such a wide frequency band would not have been possible with a traditional TMD, which has a typical damping value of approximately 10% around the centre damping frequency [1].

4. Conclusions

The installation of an RMD on a sample scanning stage has reduced the position jitter in all directions. This has led to improvements in image quality and scanning speed. This was achieved with a manufacturing cost of less than £10.

As RMDs have a broadband damping range, multiple resonances can be targeted. As such, sample stage hardware can be modified considerably without requiring any RMD changes.

The passive nature of this RMD means that a set and forget strategy may be applied. With no solid moving parts, wear is negligible, meaning no maintenance is required.

The manufacture of an updated all-metal version of this RMD is currently being explored, which would be more durable and have the capabilities to operate under ultra-high vacuum.

The authors hope that the framework established during this RMD development can be applied to a wide range of synchrotron instruments, enabling a low-cost and effective option to improve vibrational stability.

References

[1] C. Verbaan, "Robust mass damper design for bandwidth increase of motion stages," Technische Universiteit Eindhoven, 2015.

[2] L. Cremer and M. Heckl, Stucture-Borne Sound, New York: Springer-Verlag, 1988.

[3] A. Vince and A. Askenazi, Building Better Products with Finite Element Analysis, 1st ed., Santa Fe: OnWord Press, 1999.

[4] K. Anas, S. David, B. R.R., M. Selvakumar and S. Chattopadhyay, "Energy dissipation characteristics of crosslinks in natural rubber: an assessment using low and high-frequency analyzer," *Journal of Polymer Engineering,* vol. 38, no. 8, pp. 723-729, 2018.

[5] N. Kodera, H. Yamashita and T. Ando, "Active damping of the scanner for high-speed atomic force microscopy," *Review of Scientific Instruments,* vol. 76, 2005.

[6] M. H. Stanikzai, S. Elias, V. Matsagar and A. Jain, "Seismic response control of base-isolated buildings using tuned mass damper," *Australian Journal of Structural Engineering,* vol. 21, no. 1, pp. 310-321, 2020.

[7] J. Kelly, A. Male, N. Rubies, D. Mahoney, J. Walker, M. Gomez-Gonzalez, G. Wilkin, J. Parker and P. Quinn, "The Delta Robot—A long travel nano-positioning stage for scanning x-ray microscopy," *Review of Scientific Instruments,* vol. 93, p. 043712, 2022.