euspen's 23rd International Conference & Exhibition, Copenhagen, DK, June 2023
www.euspen.eu

Semi-automatic process control for efficient refurbishment of turbine blades

E. Uhlmann[1, 2], J. Polte[1, 2], C. Mühlich[2], S. Mönchinger[2] , P. Ebrahimi[3]

[1]*Technische Universität Berlin, Institute for Machine Tools and Factory Management IWF, Germany*
[2]*Fraunhofer Institute for Production Systems and Design Technology IPK, Germany*
[3]*Gestalt Robotics GmbH, Germany*

christopher.muehlich@ipk.fraunhofer.de

Abstract
The refurbishment of turbine blades requires the precise removal of damaged surface coatings. In manufacturing companies, this usually involves time-consuming activities such as detecting residual coatings and adapting process settings to varying turbine blade geometries. The use of automated systems therefore opens up opportunities to improve the efficiency of turbine blade refurbishment processes by replacing manual tasks. This paper presents an conceptual approach for a semi-automatic decoating process of turbine blades that integrates abrasive blasting technology into a closed loop process control system. The experimental setup consists of a robot for guiding the turbine blade in a blast machine and a nozzle system for local removal of residual coatings using abrasive material. Based on image processing the residual coatings of a turbine blade are labeled by a neural network and mapped to a 3D model of the turbine blade, which is used by a software control system to coordinate the decoating process. Using a prototype setup this paper investigates the applicability of the proposed approach and evaluates its feasibility.

Keywords: semi-automatic process control, image processing, refurbishment, 3D mapping

1. Introduction

Turbine blades are among the most expensive components of industrial gas turbines. The incentives of manufacturing companies are accordingly high to extend their lifespan as long as possible [1,2]. This poses particular challenges, as turbine blades must withstand extreme thermomechanical loads during operation. For protection against oxidation, corrosion and high gas temperatures turbine blades are provided with application-specific coatings. These are often composed of a metallic adhesion-promoting layer to protect against hot gas corrosion and a ceramic thermal barrier coating (TBC) to prevent excessive heat input. For corrosion protection chemical elements such as nickel, chromium, aluminum and yttrium are used, which also support the adhesion of the overlying TBC [3].

However, the coating of turbine blades is subject to wear with increasing operation time. For example, various load changes, temperature cycling and further stress conditions can lead to increasing material fatigue. As a result, damages such as spalling of surface coatings and cracks in the base material become more likely [4]. In this context, the refurbishment of turbine blades plays a crucial role, as it can save costs and resources by ensuring component reusability. For a turbine blade to be accurate refurbished, several process steps are required. First, an inspection must determine if the component is admissible for repair. This is done by measuring characteristic features such as wall thickness and checking if they are within the specified tolerances. This requires the turbine blade to be precisely decoated beforehand. Further, non-destructive tests are performed for detecting cracks and a component-specific repair process is defined based on the obtained results. After completion of the repair processes, the turbine blade is finally prepared for a renewed operational use by applying a new coating and checking its serviceability.

Due to the sequential refurbishment process, the precise decoating of turbine blades is of particular importance. If done imprecisely, the removal of base material can render a component unusable and thus cause considerable costs. Further challenges arise from the complex blade geometry and the component-specific residual coatings of varying thickness. To address these issues, an adaptive decoating process is required. In literature, various process technologies exist for decoating surfaces. Among others, these include abrasive blasting, water jetting as well as chemical and electrochemical approaches. In industrial practice these approaches typically involve a significant degree of manual tasks such as identifiying residual coatings and adjusting process settings to varying conditions. In case of chemical processes, this also implies handling of environmentally harmful substances that pose a potential health risk to the operator. Moreover, manual tasks might even require an incremental and time-consuming process execution to prevent the removal of base material. Consequently, replacing manual decoating tasks through an automated system offers promising possibilities to improve the efficiency of refurbishment processes, which are worth investigating.

To contribute herefore, this paper presents an conceptual approach for semi-automatic decoating of turbine blades. An increase in automation degree is provided through a closed-loop control system, which consists of image processing methods for residual coating detection, a robot system for flexible turbine blade positioning and an adjustable nozzle system for decoating of selected surface areas. The paper is structured as follows. Section 2 reviews existing approaches for turbine blade decoating and image processing. Section 3 follows with the conceptual presentation of the aforementioned semi-automatic control system. In section 4, the results of the experimental investigations are described and used to derive a statement about the feasibility of the proposed approach. Section 5 concludes with a summary and outlook for further research.

2. Literature review

2.1. Turbine blade refurbishment

The refurbishment of turbine blades requires the precise removal of worn coatings. This renders manufacturing processes of cutting technologies generally applicable. By definition, cutting includes all technologies that change the shape of a solid body by locally dissolving the cohesion of the material [5]. However, only a few technologies have proven effective for surface decoating, which can be divided into mechanical, thermal, chemical and electrochemical approaches.

Several methods for turbine blade refurbishment have been presented in the past. JEUTTER ET AL. [6] describe a method that combines mechanical and chemical removal techniques for turbine blade decoating. Here, the outer part of an anti-corrosion coating is removed by water jetting, which enables rapid processing and thus represents a cost-effective decoating approach. Further, a chemical process is applied to remove the remaining coating. This ensures that the base material remains unchanged, which could otherwise be damaged by the water jet. ROSENZWEIG ET AL. [7] on the other hand propose the use of weak acid solutions to remove coatings, which are affected by hot gas corrosion. The authors found this approach particulary suitable in combination with pretreatment such as sandblasting. Both aforementioned approaches have in common that their process sequence requires mechanical decoating as a preprocessing step, followed by a chemical decoating for precise stripping. In contrast, KEMPSTER AND CZECH [8] apply those steps in a reversed order for the refurbishment of turbine blades. The authors introduce a technique that uses a chemical vapour deposition process for surface layer activation of corroded components. This activation allows easier removal of coatings through subsequent chemical or mechanical processes. Similarly, MEIER [9] uses acid as a chemical pretreatment in order to fracture the coating of a turbine blade. This enables the following decoating using techniques of abrasive blasting and laser beam ablation. Independent of the procedure, hybrid approaches that integrate a multi-stage decoating process inevatibly increase process time and complexity. This results from the additional need to coordinate two process technologies instead of a single one. As an alternative, BAUTSCH ET AL. [10] present an electrochemical decoating method. Here, a turbine blade is immersed in an electrolyte and connected to a voltage source together with a control electrode. During execution, process variables containing information about the current decoating progress are continuously recorded. This allows adaptive control of the overall process by adjusting parameters based on the current process state. Adaptive control approaches that exclusively use abrasive blasting technology in combination with image processing methods are not to be found in the literature to the authors' knowledge.

2.2. Image processing

The mapping of 2D to 3D images, or simply 3D mapping, describes the transfer of information acquired with a light- or radiation-based detector to an object oriented in a spatial coordinate system. Examplary applications include mapping of X-ray images to three-dimensional crystal lattices, laser-based localization and simultaneous mappings in robotic systems or mapping of detected features in the surveillance of buildings. All applications have in common that information from the real observation object is captured by a detector and transferred to a spatial, virtual environment. KUTSAL ET AL. [11] transform their data acquired by an X-ray machine into a 3D coordinate system, where they tessellate it into a three-dimensional object. NÜCHTER ET AL. [12] describe various algorithms for registration and processing of point clouds, which are subsequently tessellated and thus processed into a three-dimensional map of the environment. QIANG ET AL. [13] proceed similarly, but additionally extract features and finally also generate surfaces to virtually describe the objects in 3D. In the application of this method presented here, features characterizing the condition of a turbine blade under operational stress are transferred to a 3D model. The features are transferred to a surface mesh after being mapped to the model. This 3D mapped information can then be used to control the decoating process.

3. Semi-automatic decoating process

This section introduces the semi-automatic control system for decoating turbine blades based on abrasive blasting technology. The proposed system comprises a robotic manipulator, a nozzle and a camera system, which are integrated into a closed-loop control using software-based data processing. Figure 1 shows the basic interaction of the hardware and software components. The general procedure is as follows. To determine the current system's state, data such as images, robot and nozzle pose information is continuously acquired during the blasting process. The state information is then send to a software layer that translates it to control commands. First, residual coatings on the turbine blade surface are detected by a trained neural network based on the Mask R-CNN architecture using 2D images. Due to deviations in labeling performed by application experts, the detection rates have been evaluated manually. The underlying image base for the model has been enlarged by the reviewed predictions of its predecessor stages. Subsequently the segmented 2D images are mapped to a 3D model of the turbine blade, whose surface has been divided into geometrically predefined zones beforehand. This enables the software controller to determine the control commands for the robotic manipulator and nozzle system that are required to remove the residual coatings. The control cycle concludes with the commands being executed by the hardware devices.

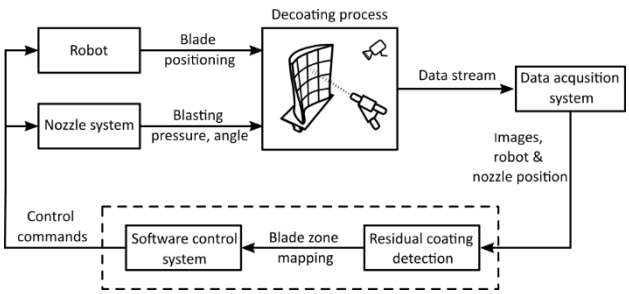

Figure 1. Semi-automatic control system

3.1. Control system

The actual decoating process is based on abrasive blasting technology. Here, granular material is accelerated with the help of compressed air within a nozzle and directed towards the surface of the turbine blade to create an abrasive effect. Relevant process parameters include the used abrasive material, blasting speed, angle and surface exposure time. In order to set the blasting angle to a specific value, the pose of the robotic manipulator and the nozzle system must be aligned with each other. The blasting speed is determined by the air pressure, which can be manually adjusted on the blast machine. Figure 2 shows the prototypical design of a modified blast machine provided by the company HGH GmbH.

As illustrated, the task of the 6-axis robotic manipulator is to position the turbine blade in the workspace of the blast machine. The robot accesses the workspace through an opening

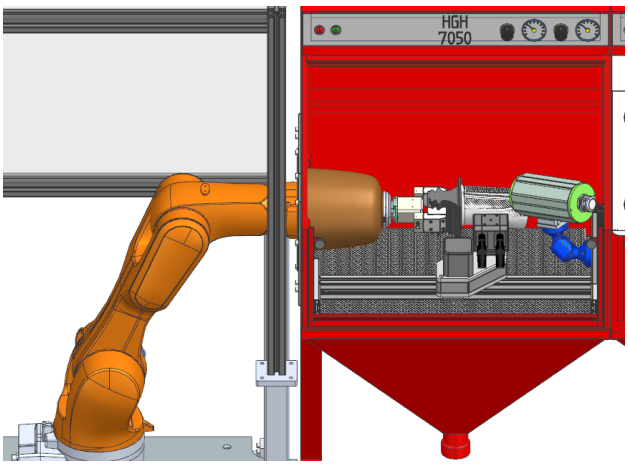

Figure 2. Prototypical design of an semi-automatic blast machine

in the casing, which is equipped with a fabric cover for sealing. This prevents abrasive material of high speed from escaping the blast machine during operation. Further, the shape of the robot gripper has been specifically adjusted to the base of the turbine blade to ensure an even clamping force distribution and thus a stable alignment. The nozzle system represents the robot's counterpart. It consists of two independent controllable blasting nozzles mounted on a rack, which can be adjusted in their orientation remotely using a stepper motor. Additionally, a monochrome camera is placed within the working area to provide a live stream of the decoating process. This forms the basis for the subsequent residual coating detection in the software layer and also enables continuous monitoring of the decoating progress. According to the described functionalities, the hardware components mentioned so far provide all necessary interfaces required by the software layer for data exchange. The scope of the software control system includes a user interface for process monitoring, the remote control of the robot-guided turbine blade positioning and the angle adjustment of the nozzle system. All software functionalities have been implemented in C++.

3.2. Residual coating detection

The basis for the mapping are the analyzed 2D images, specifically the polygons, polylines and bounding boxes derived from them. In this application, they are exported from the CVAT software in COCO/JSON format. They contain the metric coordinates describing the 2D objects. In the case of a polygon, which is used to predict spalled coatings, these are connected points that enclose an area. Since the image analysis used an algorithm that detects features in the form of defects, in this case the polygons enclose the areas where the coating has already been removed during operation. This means that not only the polygons have to be transferred to a 3D model, but for further decoating, their inversion is necessary, since the areas that still have a residual coating need to be detected.

The process of mapping requires that the global position of the object and the position of the cameras that capture it are known. The calibration is performed before the acquisition of the blades by means of a Charuco board. Using a certain number of images of the respective cameras on which the Charuco board is visible, the camera positions can thus be determined. The detection of the position of the blade in space is performed by a pose estimation. Keypoints - characteristic features in the 2D image of the target object - are detected, manually matched with a template model and stored as a template for the respective blade type. In the process, the respective detected keypoints are then registered with those in the model via a Perspective-n-Point (PnP) problem solving. The PnP algorithm can be used to infer the orientation in another image projection when the orientation is known from one image projection. The result is the displacement matrix and thus the current position of the object in relation to the cameras.

During the 3D mapping itself, the polygons, polylines and bounding boxes are loaded at the position where they were detected by the camera. This refers to the respective global position of the sensor within the camera. From there, the respective individual points are transferred to the model via ray tracing. This means that a ray is emitted from the starting point in the direction of the camera axis. With calculating the intersection point, the position of the 2D point is transferred to the 3D model. This makes it possible to transfer the 2D objects to the 3D model. Thus they are described spatially and metrically. The mapping of labeled spallations to the 3D turbine blade model is depicted in Figure 3a-c. The model that is projected onto is a so-called polygon model in STL format. This means that the surface is described by individual polygons. The projected points are finally transferred to the respective cut polygon, creating a surface of the defect. Since only the boundary is transferred initially, the polygons that lie within the boundary must still be found using a region growing algorithm.

The blade model itself is divided into predefined zones. They describe areas that lead to different results when faults occur. In one zone, a residual layer could be irrelevant, while in another it is mandatory to remove it. Therefore, the objects mapped in the 3D model are assigned to the respective zones in which they are located. The output is a JSON file with polygons, polylines and bounding boxes transformed into a 3D coordinate system and assigned to one or more zones. Furthermore, the respective surfaces are exported in STL format. The inversion of the surfaces without coating represent the respective layers that afterwards have to be decoated during repair.

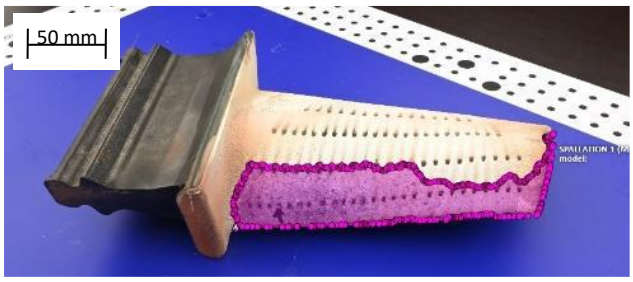

Figure 3a. Labeling of a large spallation

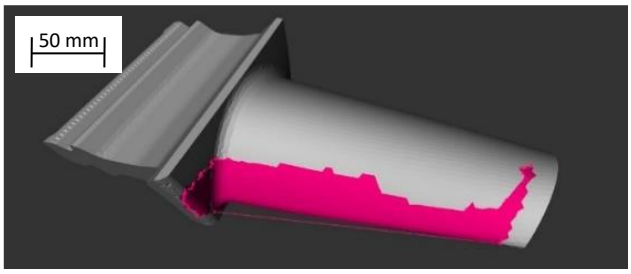

Figure 3b. 3D mapping of a large spallation

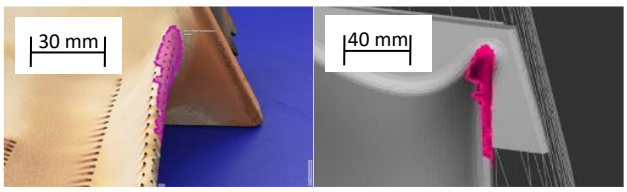

Figure 3c. Labeling (left) and mapping (right) of a medium spallation

4. Experimental Results

In order to make an accurate statement about the feasibility of the proposed system, the residual coating detection was evaluated separately from the interaction of hardware components and software control. For the latter, the nozzle system was first tested with respect to its intended functions. This included the adjustability of the blasting speed and the nozzle angle. Similarly, the mobility of the robotic manipulator and the usability of the camera system was confirmed through testing. After successful commissioning, decoating experiments were conducted with turbine blades. To reduce complexity, it was assumed that the robot can guide the turbine blade along a set of predefined path lengths of l = 50 mm with a constant velocity of v = 0.001 m/s. The set of paths were created manually using the robot's implemented remote control. Also, for each robot path, an angle of the nozzle system was specified in advance, which was set by the software control system using the stepper motor at the start of the robot motion. The nozzle system and robot motion were aligned so that the distance between the nozzle tip and the blade surface was approximately d = 55 mm. The blasting pressure was also set at a constant value of p = 5 N/mm^2 to ensure the comparability of the results. For the experiments, F90 grit corundum was used as abrasive material. Figure 4 shows the setup before starting the decoating process. The TBC layer was safely removed in all conducted experiments after one pass. In addition, preliminary tests on plate samples showed that the MCrAlY coating could be removed with similar process settings. However, experiments revealed that not all blade areas could be reached without restrictions, which is mainly due to the limited working space. It was also found that the component's surfaces accumulate abrasive material, causing the circulating material to be successively reduced. In its extreme, this lead to a loss of the abrasive effect. For further tests, a technical solution that keeps the abrasive material circulating must be integrated.

Regarding the residual coating detection the following conclusion can be drawn from the experimental investigations. When mapping the spallations, deviations may occur if the regions to be mapped are very large. These can result from inaccuracies in the template generation, a deviation in the calibration of the table as well as the resolution of the mesh of the component. The inaccuracies in mapping can become critical if boundaries of zones are exceeded. A basic feasibility of transferring the 2D features to the 3D model could be shown.

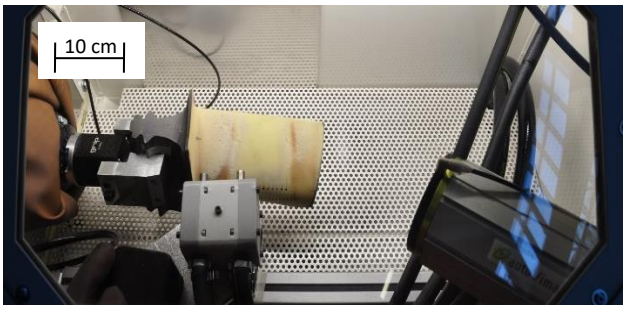

Figure 4. Setup before the start of the decoating process

5. Conclusion

This paper presents a semi-automatic decoating system for the refurbishment of turbine blades. Experimental results underline the basic feasibility of the proposed system. For residual coating detection, the labeling of existing spallations and mapping those onto a 3D blade model could be confirmed. Moreover, it can be concluded from experiments that turbine blades can be successfully deoated using abrasive blasting. However, several limitations of the proposed system became visible. Due to inaccuracies, mapping large spallation areas can result in mislabeling of blade zones, increasing the risk of base material being removed during abrasive blasting. Further, the coordination of the robot-guided turbine blade and the nozzle system represents a complex task. For the controllability of the abrasive blasting process the distance between nozzle tip and turbine blade must be adjustable, which is particularly challenging due to the free form shape of the turbine blade. Despite the increased process complexity, the proposed decoating system has the potential to reduce process time by automating time-consuming activities and to improve process quality by using software-based methods for precise decoating, making the refurbishment of turbine blades more efficient. The contribution of this paper can be considered as a basic feasibility statement. Nevertheless further research is needed to make adaptive decoating systems an industrial-grade solution. Future work will include detailed evaluations of decoating experiments as well as investigations to optimize the robot-nozzle coordination and to reduce inaccuracies of 3D mapping.

Acknowledgements

The results were obtained in the project "Maintenance, Repair & Overhaul - Optimization of the MRO Process for Gas Turbine Blades of Siemens Energy AG", which is co-financed by the European Regional Development Fund within the framework of the Werner-von-Siemens Centre for Industry and Science.

References

[1] Alfred, I.; Nicolaus, M.; Hermsdorf, J.; Kaierle, S.; Möhwald, K.; Maier, H.; Wesling, V.: Advanced high pressure turbine blade repair technologies. Procedia CIRP 74 (2018), pp. 214 – 217.

[2] Swaminathan V. P.; Lowden P.: Gas Turbine Blade Life Assessment and Repair Guide. 1989 URL: https://www.epri.com/research/products/GS-6544 (Accessed: 2023-01-06).

[3] Bals, H.F.J.; Bolms, H.-T.: Turbinenbeschaufelung. In: Stationäre Gasturbinen. Eds.: Lechner, C.; Seume, J., Springer Berlin Heidelberg, 2019, pp. 347 – 363.

[4] Padture, N.P.; Gell, M.; Jordan, E.H.: Thermal barrier coatings for gas-turbine engine applications. Science 296 (2002) 5566, pp. 280 – 284.

[5] Fritz, A.H.; Schulze, G.: Trennen (Zerteilen; Spanen; Abtragen; thermisches Schneiden). In: Fertigungstechnik. Eds.: Fritz, A.H.; Schulze, G. Springer Berlin Heidelberg, 2010, pp. 255 – 410.

[6] Patent US 00 6660 102 B2 (2003-12-09). Siemens AG. Jeutter A.; Reymann H.: Method of decoating a turbine blade.

[7] Patent US 00 6174 380 B1 (2001-01-16). General Electric Company. Rosenzweig, M. A.; Conner, J. A.; Bowden Jr., J. H.: Method of removing hot corrosion products from a diffusion aluminide coating.

[8] Kempster, A.; Czech, N.: A Novel Method for Refurbishing Used Hot Section Gas Turbine Blades. Journal of Engineering for Gas Turbines and Power 117 (1995) 1, pp. 166 – 171.

[9] Patent DE 10 2004 049 825 A1 (2006-04-20). MTU Aero Engines GmbH. Meier R.: Verfahren zum Entschichten von Bauteilen.

[10] Patent EP 1 706 522 B1 (2006-10-04). MTU Aero Engines GmbH. Bautsch, T.; Günther, A.; Olfe, J.; Tai, P.-T.; Wilke, P.: Method for the electrochemical removal of layers from components.

[11] Kutsal, M.; Poulsen, H.F.; Winther, G.; Sørensen, H.O.; Detlefs, C.: High-resolution 3D X-ray diffraction microscopy: 3D mapping of deformed metal microstructures. Journal of applied crystallography 55 (2022) 5, pp. 1125 – 1138.

[12] Nüchter, A.; Lingemann, K.; Hertzberg, J.; Surmann, H.: 6D SLAM-3D mapping outdoor environments. Journal of Field Robotics 24 (2007) 8-9, pp. 699 – 722.

[13] Qiang, L.; Ling, L.: Engineering Surveying and Mapping System Based on 3D Point Cloud and Registration Communication Algorithm. Wireless Communications and Mobile Computing (2022), pp. 1 – 12.