euspen's 23rd International Conference & Exhibition, Copenhagen, DK, June 2023
www.euspen.eu

Fluorescence-based measurements of material removal and process temperature during laser chemical machining

Dirk Stöbener[1, 2], Merlin Mikulewitsch[1], Andreas Fischer[1, 2]

[1]*University of Bremen, Bremen Institute for Metrology, Automation and Quality Science (BIMAQ), Linzer Str. 13, 28359 Bremen, Germany*
[2]*University of Bremen, Center for Materials and Processes (MAPEX), P.O. box 33 04 40, 28334 Bremen, Germany*

d. stoebener@bimaq.de

Abstract
The ablation rate in the laser chemical machining process depends on various parameters, e.g., workpiece material, surface and fluid temperature. Several of these parameters can neither be specifically influenced by process parameters nor directly measured. In order to achieve sufficient workpiece quality for high-precision components, an in-process measurement of the component geometry and the surface temperature is desired. To record the geometry, the approach of indirect geometry measurement has already been presented. It determines the local surface position based on depth scans of the fluorescence intensity of a dye added to the machining fluid. However, a suitable approach for a corresponding temperature measurement is not yet available.
Therefore, this paper presents investigations with the indirect measurement setup regarding the temperature dependence of the fluorescence intensity, which showed that measurable changes in the detected intensity occur when the temperature of the fluid at the component surface changes by a few degrees. However, a meaningful temperature measurement can only be achieved if the geometry is known. The results imply that a separation of geometry and temperature information is only possible if the temperature is not determined from the fluorescence intensity but from the fluorescence lifetime. As a result, the feasibility of simultaneous process internal measurements of the material removal and the temperature is indicated and the measurement quality is assessed.

Measurement, Fluorescence, Temperature, Indirect, Geometry, Laser Chemical Machining

1. Introduction

Compared to other micromachining processes, the process of laser chemical machining is characterized by a high dimensional manufacturing quality, which is achieved especially at large edge angles and small edge radii [1]. Its removal rate is influenced by many different parameters - in particular, the formation of boiling bubbles must be avoided for achieving a high manufacturing quality. For this reason, manufacturing is carried out in a corresponding, empirically determined process window, which causes the removal rate potential of the process to be far from fully exploited. Since process parameters such as the feed rate, the laser energy and also the laser focus size can be easily adjusted automatically, a quality control loop could help to increase the removal rate without reducing the manufacturing quality. However, this requires simultaneous in situ or in-process measurements of the manufactured geometry and the fluid temperature near to the workpiece surface.

The manufactured cavity's geometry tolerances in the single micrometer range limit the choice of possible in situ geometry measurement methods to only a few optical methods. In addition, the complex fluid environment and the gas bubbles occurring during removal are challenging measurement conditions, which result in e.g. refractive index variations in the process fluid preventing the use of interferometric methods. Furthermore, steep edge angles produce unavoidable artifacts due to unwanted reflections in measurements using conventional confocal microscopy techniques [2]. Maruno et al. showed that an optical, indirect geometry measurement is not influenced by these measurement conditions. They successfully applied this confocal fluorescence microscopy-based method in cutting processes with fluid layers as thin as 120 µm [3] whereas Mikulewitsch et al. demonstrated that it can also be used in fluid layers several millimeters thick [4].

Since the water-based processing fluid prevents a thermographic temperature measurement and locally applied temperature sensors like thermoelements would interfere with the optical geometry measurement, a suitable temperature measurement method in the LCM process is not yet known.

Therefore, this paper investigates whether the temperature dependence of fluorescent light can be used to determine the fluid temperature in the LCM process, which would enable to use the same setup for geometry and temperature measurements. The functionality of the fluorescence-based geometry measurement as well as the application for a temperature evaluation are presented in section 2. Section 3 briefly describes the setup and procedure used for the investigation and in section 4 the obtained results are shown. Section 5 gives an interpretation of the results and an outlook on future work.

2. Indirect fluorescence-based measurement method

The indirect measurement technique is based on a pointwise measuring, conventional confocal fluorescence microscopy setup containing a galvanometer scanner mirror in order to enable 2D-scans of the workpiece surface (fig. 1). In contrast to conventional methods, the indirect principle determines the boundary layer position $z_0(x, y)$ between fluid and workpiece (= workpiece geometry). This is achieved by detecting the intensity $S(x, y, z)$ of the fluorescence light emitted by the fluid instead of the scattered light from the surface at several height positions z inside of the fluid. The resulting intensity distribution can be modeled as follows:

$$S(x,y,z) = S_0(T(x,y,z),\epsilon) \cdot Z(z, z_0(x,y), z_1, \epsilon). \quad (1)$$

S_0 is the total fluorescence intensity, which depends on the temperature (due to temperature dependent dye internal energy conversion) and the fluid's absorption parameter ϵ, whereas Z describes the intensity decay in z-direction. The decay results from the light extinction in the fluid as well as the absence of the fluorescence effect when the confocal volume reaches the workpiece. Hence, it depends on ϵ, z_0 and the position z_1 of the fluid surface. More details about the decay function Z are presented in [4], where z_0 is determined by a least square approximation of the measured intensities to eq. 1, while S_0 is assumed to be constant.

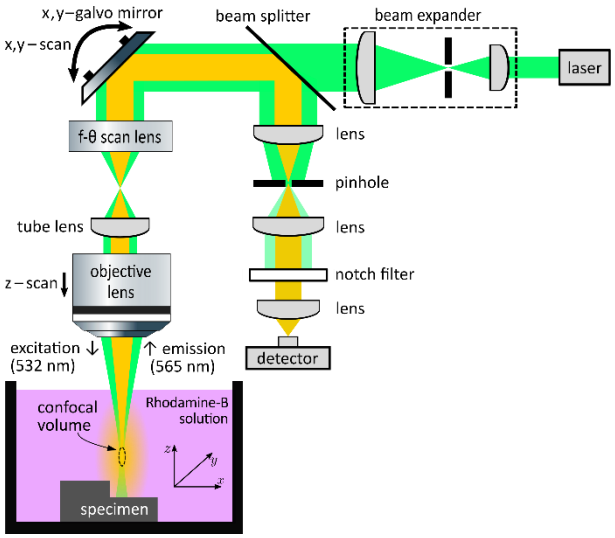

Figure 1. Scheme of the geometry and temperature measurement.

For the temperature measurements, the fluorescence intensity is evaluated from eq. 2. Since the decay function Z affects the captured intensity, it has to be kept constant or the geometry $z_0(x,y)$ has to be known in order to eliminate this influence. Then, the total intensity S_0 can be modeled by:

$$\boldsymbol{S_0(T(x,y,z),\epsilon) = S_{max} - \frac{T(x,y,z)}{\kappa(\epsilon, Z)}}, \quad (2)$$

where κ is a coefficient for the temperature calibration of the intensity values and S_{max} is the maximum measured intensity.

3. Experimental setup and procedure

In order to demonstrate the feasibility of the fluorescence-based temperature measurement approach, a laboratory setup is used, which adapts the LCM process conditions. For this purpose, a metal foil is placed in a Petri dish below the measurement system. The dish contains dye infused LCM process fluid, which completely covers the foil. The foil is heated from the bottom side through the transparent dish via a fiber-coupled laser with a Gaussian laser beam profile to generate a Gaussian temperature distribution in the foil (fig. 2).

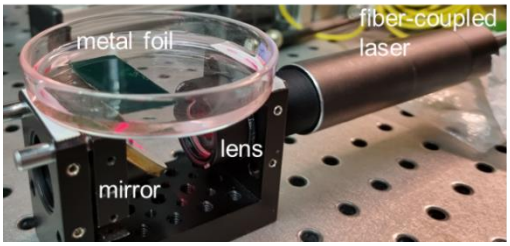

Figure 2. Experimental setup with the laser-heated metal foil submerged in fluorescent LCM process fluid.

After reaching a steady temperature state, the fluorescence intensity on the top side of the foil surface is scanned 10 times in *x*-direction at a constant distance close to the surface, which keeps Z in eq. 1 constant. The necessary calibration for absolute temperature values is achieved by comparison with reference values from a thermocouple placed on the workpiece surface.

4. Temperature measurement results

The measured and calibrated lateral temperature profile is presented in fig. 3. The circles represent the mean values of the 10 measurements at each scan position and the error bars illustrate the standard deviation, which is in the range of about 0.1 °C. The profile shows a smooth, nearly Gaussian shape, which corresponds to the expectation based on the heating with a Gaussian laser beam profile.

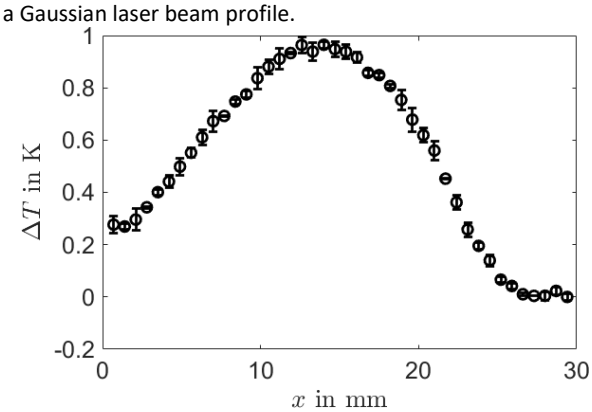

Figure 3. Temperature profile on the top side of a submerged metal foil heated on the bottom side by a laser, measured via fluorescence.

5. Summary, Conclusions and Outlook

The presented investigation confirms the feasibility of a fluorescence intensity-based temperature measurement in the LCM process fluid near to the workpiece surface with a temperature repeatability of about 0.1 °C. Since the geometry and temperature influences on the fluorescence intensity interact nonlinearly (eq. 1), they cannot always be reliably separated by a least square approximation, preventing simultaneous temperature and geometry measurements. However, the results of the investigation show that a sequential determination of these two quantities inside the process environment is feasible with the presented system if the other quantity is constant or known.

Since the temperature affects not only fluorescence intensity but also lifetime, the setup will be extended in the future to enable a measurement of the fluorescence lifetime. It is independent of the total intensity and should thus allow a joint determination of temperature and geometry.

The authors acknowledge the financial support of the German Research Foundation (DFG), project no. 451385285.

References

[1] Messaoudi H, Böhmermann F, Mikulewitsch M, von Freyberg A, Fischer A, Riemer O, Vollertsen F 2018 Chances and Limitations in the Application of Laser Chemical Machining for the Manufacture of Micro Forming Dies *Proc. of the 5th Int. Conf. on New Form. Techn. ICNFT* 1-8 DOI: 10.1051/matecconf/201819015010

[2] Liu J, Liu C, Tan J,Yang B, Wilson T 2016 Super-aperture metrology: Overcoming a fundamental limit in imaging smooth highly curved surfaces J. of Microscopy 261 300–306 DOI: 10.1111/jmi.12334

[3] Maruno K, Michihata M, Mizutani Y, Takaya, Y 2016 Fundamental study on novel on-machine measurement method of a cutting tool edge profile with a fluorescent confocal microscopy Int. J. Autom. Technol. 10 106-113 DOI: 0.20965/ijat.2016.p0106

[4] Fischer A, Mikulewitsch M, Stöbener D 2020 Indirect fluorescence-based in situ geometry measurement for laser chemical machining CIRP Annals - Manufacturing Technologies 69, 481-484 DOI: 10.1016/j.cirp.2020.03