euspen's 23rd International Conference & Exhibition, Copenhagen, DK, June 2023
www.euspen.eu

Measurement errors in the Planck-Balance caused by alternating forces

Johannes Konrad[1], Christian Rothleitner[1], Jonas Kloß[1], Thomas Fröhlich[2]

[1]*Physikalisch-Technische Bundesanstalt, Bundesallee 100, 38116 Braunschweig, Germany*
[2]*Technische Universität Ilmenau, Gustav-Kirchhoff-Straße 1, 98693 Ilmenau, Germany*

Correspondence: Johannes.Konrad@ptb.de

Abstract

The Planck-Balance operates according to the Kibble principle, and allows a direct determination of masses without traceability to the International Prototype of the Kilogram (IPK). Due to the limited mechanical movement range available for operating the Planck-Balance in the velocity mode, sinusoidal operation is a promising way to still generate a known signal pattern with a sufficiently high induction voltage. However, there are also dynamic effects associated with this mode of operation, such as deformations, which can lead to frequency-dependent errors. In this paper, a few simple design improvement measures are derived that should reduce the frequency dependence caused by deformations in the actual setup by about a factor of 10.

planck-balance, force factor, watt balance, kibble balance, mass, kilogram

1. Introduction

In 2019, the International Prototype of the Kilogram (IPK) has officially been replaced by another formulation for the definition of mass. Since then, it has been possible to determine mass directly without working with weights that have to be traceable to the IPK. One of the methods described so far in the "Mise en pratique" for the realisation of mass units is the Kibble balance or Watt balance, with which the force factor Bl of an electromagnetic actuator - consisting of a coil and a magnet - is first determined. Bl describes the product of B, the magnetic flux density, and l, the coil length.

To determine the Bl, a relative movement between the coil and the magnet of the actuator is generated, and the quotient of the induction voltage and the relative speed is calculated. This so-called velocity mode is intended to replace the calibration of a conventional electromagnetic force compensation (EMFC) balance with a known mass. If one assumes that the force factor is the same as the factor that links the current through the same coil and the Lorentz force generated by this action, this can be used to compensate the weight of a mass by means of a balance.

There are already realised Watt/Kibble balances working according to this principle, some of them developed many years ago and still constantly being improved, thus, many publications exist. A detailed historical background and overview can be found in [1]. Unlike the balances that have been realised so far, the aim of this project is to develop a device that is more compact, consists of off-the-shelf parts, and that should also be applicable for industrial or laboratory uses. In cooperation with TU Ilmenau, the Planck-Balance – a specific implementation of the Kibble balance – has been developed, which is currently being improved further [2].

This article first explains the function and special features of the Planck-Balance in comparison to most Kibble balances. After presenting one of the current problems of this method, the influences due to alternating forces on the deformation states of the structure and the associated effects on the measurement result are addressed. This is also verified by numerical simulations of the Planck-Balance's structure.

The general purpose is a quantification of the errors generated, which should give an impression of the significance of the subject. After deriving guidelines for the design, the next version of the Planck-Balance is discussed, as well as the improvements to be expected.

2. Working principle of the Planck-Balance

In the Planck-Balance (Figure 1) a coil (8b) is attached to the adapter (9) which itself is mounted on to the load carrier (4) of an EMFC balance and moved in such a way that the lever (1) rotates about its main pivot. Thus, due to the parallelogram guidance of the links (2.1, 2.2), a circular arc-shaped movement is created, whereby the coil axis always points in the vertical direction (z). In the following it is assumed that the movement is rectilinear in the vertical direction, which is a good approximation due to the large arc radius and the relatively small deflection of the load carrier. Furthermore, it is assumed that the coil axis, the local gravitational acceleration and the measuring beam of the interferometer are parallel to each other.

The same load carrier is later used to determine a mass (6) by electromagnetically compensating its weight with the aforementioned coil in combination with a magnet (8a), ensuring that the lever is in a certain equilibrium state by means of the position sensor (5). The combination of the coil and the magnet is also called a voice-coil actuator.

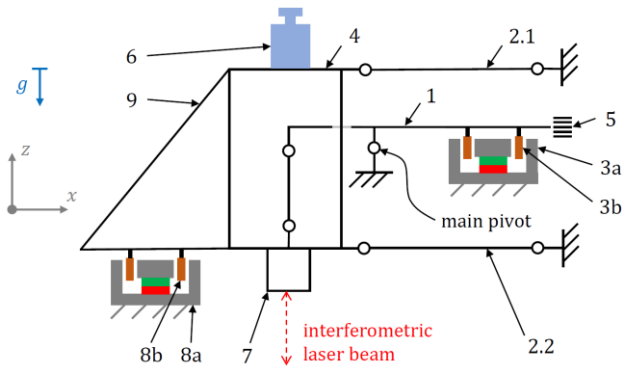

Figure 1. Functional principle of the modified EMFC balance (Planck-Balance).

In contrast to most Kibble balances, which work with a constant speed of the coil, the Planck-Balance is operated in a sinusoidal speed trajectory of the measuring coil. The reason for this is the limited mechanical travel range of the load carrier (few tens of micrometers), given by the mechanical end stops on the lever of the balance, which are set this way by the manufacturer. To work with a constant speed on such a small movement range means a high control effort and would lead to a very small maximum speed and thus only a low induction voltage signal.

It is easier to excite the system with a frequency generator to mechanical sinusoidal oscillations with a known frequency. To do this, a sinusoidal current is applied to the originally installed voice-coil actuator (3a, 3b). The force factor Bl provides – in weighing mode – the relationship between the current I through the coil and the Lorentz force F_L generated by it, as

$$Bl = \frac{F_L}{I} \quad . \tag{1}$$

Bl is determined – in velocity mode – by dividing the induction voltage amplitude $\hat{U}$ in the coil by its velocity amplitude $\hat{v}$ as

$$Bl = \frac{\hat{U}}{\hat{v}} \tag{2}$$

where

$$\hat{v} = \hat{z} \cdot 2 \cdot \pi \cdot f \tag{3}$$

applies. $\hat{z}$ denotes the mechanical oscillation amplitude and f the oscillation frequency. The respective amplitudes are determined with a linear sine fitting algorithm, which is described in more detail in [3]. If the Lorentz force equals the weight force

$$F_G = m \cdot g \tag{4}$$

of an unknown mass m, the mass can be determined by means of equation (5) as

$$m = \frac{\hat{U} \cdot I}{\hat{v} \cdot g} \quad , \tag{5}$$

utilising the knowledge of the local gravitational acceleration g. Here the buoyancy force is excluded for simplicity.

The acceleration changes also sinusoidally with an amplitude $\hat{a}$ of

$$\hat{a} = \hat{z} \cdot 4 \cdot \pi^2 \cdot f^2 \quad , \tag{6}$$

which means that the deformation states of the components are not constant. This can lead to deviations between the measured position and the actual position of the centre of the coil.

In all following simulations, only the components relevant to the respective results have been made visible. In the following, the problems described are quantified on the previous version as well as on the new version currently in production. Tilting is only dealt with around the y-axis (pitching). The deformations in the results are not to scale.

3. Frequency dependence of the Bl on the current setup

The measurements required to determine the Bl according to equation (2) were carried out for different excitation frequencies, leaving the mechanical amplitude constant. The result is a frequency-dependent force factor of the Planck-Balance as depicted in Figure 2.

Due to the temperature dependence of the force factor and the not perfectly working air conditioning, the calculated values had to be corrected to a reference temperature with a relative temperature coefficient of remanence that was determined beforehand in the weighing mode. Its magnitude is on the order of $-4 \cdot 10^{-4}\ K^{-1}$. A reference temperature of 23 °C was chosen as that is also the ambient temperature during the calibration of the precision resistors used for the force mode measurements.

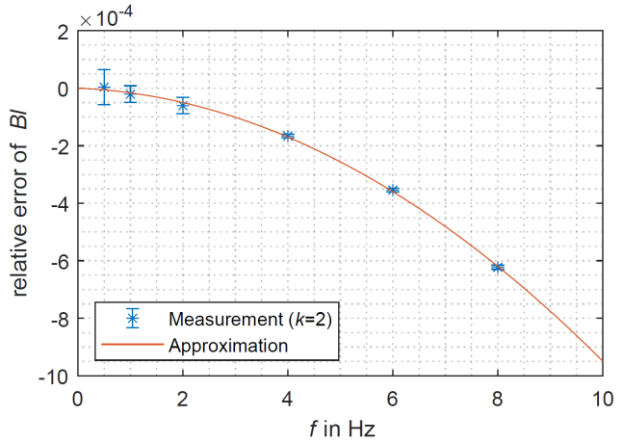

Figure 2. Measured deviation of $Bl(f)$ from $Bl(0\ Hz)$ corrected to 23 °C with an approximation by a quadratic polynomial.

As can be seen, the standard deviations are higher at low frequencies, which is partly due to the very low induction voltage in relation to noise. At higher frequencies, the standard deviation is smaller, but the frequency dependence is larger, which requires a more precise knowledge of the frequency and a higher long-term stability in order to determine the force factor accurately. Therefore, it is desirable to reduce this frequency dependence.

4. Possible mechanical causes of position deviations

Possible discrepancies between the measured position of the reflector (7, in Figure 1) and the actual position of the centre of the coil (8b, in Figure 1) due to deformations caused by alternating forces are separated into a dynamic tilt error and different vertical deformations of the coil and reflector structure respectively.

The boundary condition for the following investigations is provided by the fact that sinusoidal accelerations act on the moving parts, with a maximum amount at the two reversal points, this can be derived from equation (6).

In the actual case, the maximum acceleration at the reversal points is $\widehat{|a|} = 0.07896\ m \cdot s^{-2}$. Here, the calculation was done with $\hat{z} = 20$ µm and $f = 10$ Hz, the maximum values with which the Planck-Balance is operated. The following simulations were also carried out with this value.

4.1. Errors due to tilt (pitch)

If one considers the load carrier (4, Figure 1) and its attachments as a rigid body with flexure joints (FJ) A, B and C (Figure 3), then horizontal forces act on the joints B and C as soon as the centre of mass (*SP*) of the load carrier is not on a vertical line with its suspension (joint A). At this location, in velocity mode, the driving force F_H acts to generate the sinusoidal movement, which reaches its maximum in terms of magnitude at the reversal points. Assuming ideal flexure joints, the beam is in a horizontal position.

However, if one assumes a finite stiffness of the flexure joints, then they will be stretched or compressed by the forces F_{L1} and F_{L2}, causing a tilt of the load carrier (Figure 3). It can be expected that this will not only happen to the flexure joints, but to a lesser extent to all components involved in the force flow, such as the links of the parallel guide (2.1 and 2.2, Figure 1).

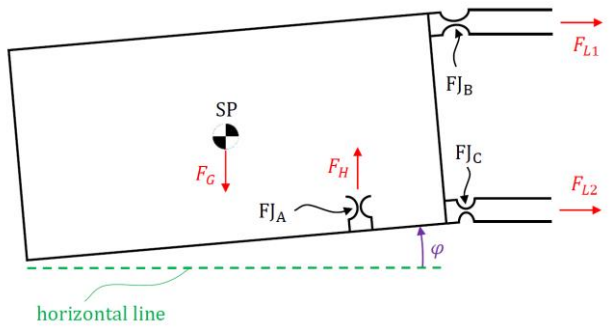

Figure 3. Pitch due to elastic flexure pivots.

If the current structure is subjected to a static finite element simulation (FEM), calculated deformations *UZ* result (Figure 4). It should be mentioned at this point, that all FEM-simulations have been carried out using the Delaunay triangulation with an standard edge length of 2.5 mm and a decreased edge length of 0.5 mm at the flexure pivots.

The results should be treated with caution, as they strongly depend on the flexure pivot's thickness, which is difficult to mesh accurately. Nevertheless this simulation can be used as an indicator for design considerations.

Here, the carrier tilts by about 65 nrad at a frequency of 10 Hz and an amplitude of 20 µm. With the distance between the reflector surface and the coil axis being 35 mm a relative deviation of the amplitudes between the centre of the reflector surface and the coil of $-1.14 \cdot 10^{-4}$ would result from the dynamic tilting.

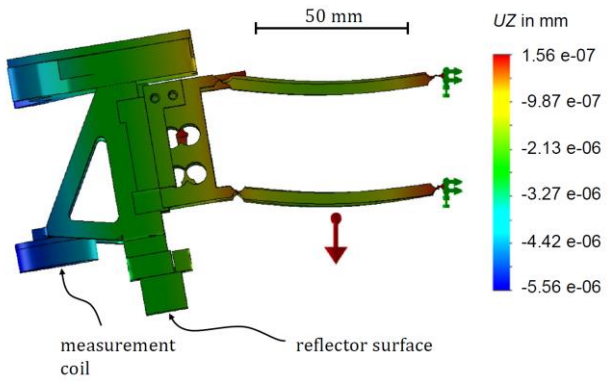

Figure 4. FEM simulation of the load carrier with attached parts.

4.2. Error due to bending

Separately treated from the error due to the pitch of the moving parts, there is also an error due to different vertical displacements of the coil and the reflector. This is shown schematically in Figure 5. At the lower reversal point of the mechanical trajectory, a certain acceleration acts upwards on the mounting. Due to the mass m of the mechanical beam, inertial forces act which deform the beam in such a way that a different displacement occurs at the reflector surface than at the coil attachment. These different displacements directly affect the error Δz in the position amplitude.

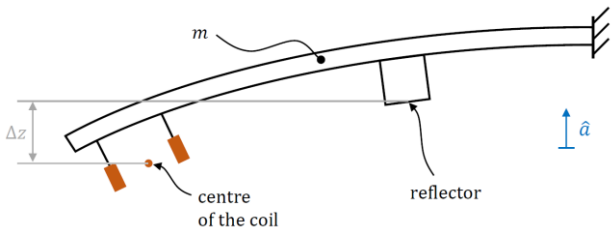

Figure 5. Different displacement of the coil and the reflector at the lower reversal point of the oscillation.

Figure 6 shows an FEM simulation of the actual system with a rigidly fixed coil holder. There is a displacement difference of $\Delta z = -0.156$ nm between the coil axis and the interferometer beam axis, and thus a relative amplitude error of $7.8 \cdot 10^{-6}$, which directly affects the calculated force factor.

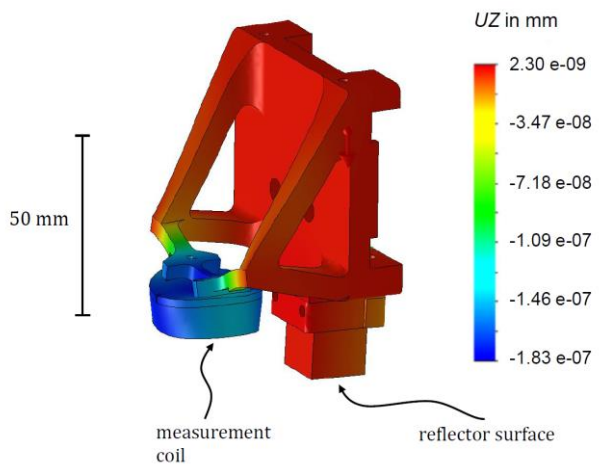

Figure 6. Result of the FEM simulation of the current set-up: Different displacements of the coil and the reflector.

Figure 7 shows the simulated total error of the current setup, consisting of pitching and vertical displacement. It should also be noted that the configuration does not correspond exactly to the one from which the measurement results in Figure 2 originate. There, a different reflector holder was used to enable operation with a three-beam interferometer, which allows a measurement of pitch and roll of the Planck-Balance's load carrier. Since the problems are basically the same, the comparability is nevertheless at least qualitatively given. The frequency dependence of the Bl caused by the combined position error due to deformation and tilt is by a factor of almost ten smaller than the measured frequency dependence in Figure 2. It could be concluded, that there might be another source of error that causes additional frequency dependence.

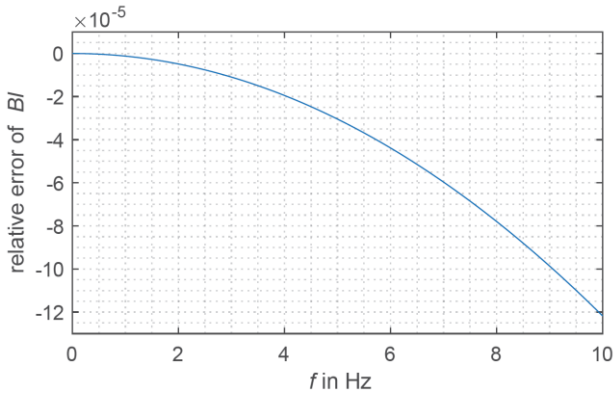

Figure 7. Calculated deviation of the Bl from its extrapolated value at a frequency of 0 Hz due to the combined position error.

5. Conclusions for the next design

Some design improvement measures can be derived from the simulations, which are listed below:

1. The centre of mass of the moving parts should be on a vertical line with their suspension to the lever to minimize the dynamic tilt.
2. The mass of the moving parts should be minimized to keep the inertial forces and thus deformations to a minimum.
3. The interferometric measurement should be as close as possible to the coil axis in order to ensure a minimal error due to dynamic tilt as well as static tilt. This deviations are also called abbe error and need to be taken into consideration in any application that requires a precise measurement of length.
4. A low frequency of oscillation should be chosen, in this way the acting forces decrease linearly and thus the deformation error decreases quadratically. However, it has to be noted that one has to deal with higher standard deviations due to the lower induction voltage signal. Strictly speaking, it is not a design measure but an indicator to choose a high Bl value or to increase the movement range of the coil relative to the magnet.
5. The bending stiffness of the coil holder should be similar to the bending stiffness of the reflector holder, then the same deflections and thus position deviations will occur.

From the conclusions drawn, a new design has been developed, which can be seen as an FEM simulation in Figure 8. Additional criteria that went into the design considerations are listed in the following:

1. A non-metallic coil holder will be used in order to reduce the impact of eddy currents, which are considered to change the magnetic field distribution of the permanent magnet. It is assumed, that the geometrical stability of the coil assembly is less of an issue compared to the impact of eddy currents, although this assumption lacks evidence.
2. A stiffer coil holder was designed to reduce the effect of displacements of the coil due to weighing forces, which leads to errors depending on the B-field gradient at weighing position.
3. The arrangement is changed in a way, that the mass to be determined is on a vertical line with the compensating coil axis to reduce the error due to eccentric load (also called corner load error).
4. A vertically adjustable magnet will be included to bring the point of the flattest magnetic profile as close as possible to the centre of the coil to generally reduce the influence of displacements, as well as possibly reduce the impact of the non-linear B-field on the result [4] [5].

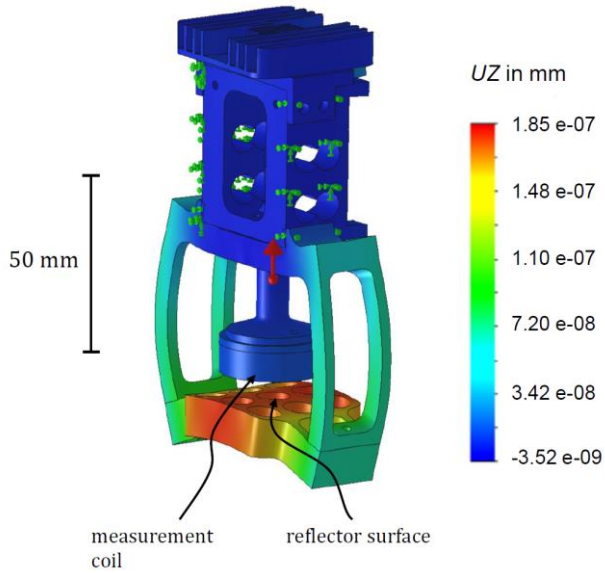

Figure 8. FEM simulation of the next version of the Planck-Balance

The simulation in Figure 8 shows the vertical deformation of the relevant parts in the new version. A total displacement error of $8.2 \cdot 10^{-6}$ between the coil centre and the reflector surface occurs at 10 Hz, therefore an error in the Bl of the same amount. According to the simulations, the displacement error due to the design changes should be improved by a factor of ten compared to the latest version, especially since there should be no more dynamic tilt of the moving parts. The design is currently in production and results can be expected at the time of the conference.

References

[1] Steiner R. 2013, History and progress on accurate measurements of the Planck constant, *Rep. Prog. Phys* **76** 016101

[2] Rothleitner C. et al., 2018, The Planck-Balance – using a fixed value of the Planck constant to calibrate E1/E2-weights, *Meas. Sci. Technol.* **29** 074003

[3] Lin S., Rothleitner C., Rogge N., 2019, Investigations on the sine fitting algorithm in the Planck-Balance, *20. GMA/ITG-Fachtagung Sensoren und Messsysteme 2019* 2019-06-25

[4] Konrad J., Rothleitner C., Kloß J., Fröhlich T., 2023, A vertically positionable permanent magnet system for the Planck-Balance, *to be published at SMSI 2023*

[5] Rothleitner C., Svitlov S., Poroskun I., Kloß J., Konrad J., 2022, Determination and correction of the force factor in the Planck-Balance, *to be published at CPEM 2022*