euspen's 23rd International Conference & Exhibition, Copenhagen, DK, June 2023
www.euspen.eu

Design and manufacturing of transfer artefacts of monocrystalline silicon

Katharina Lehrmann[1], Daniel Hagedorn[1], Rudolf Meeß[1], Stephan Metschke[1], Alexander Ruhz[1]

[1] *Physikalisch-Technische Bundesanstalt, Braunschweig, Germany*

katharina.lehrmann@ptb.de

Abstract

The complex manufacturing of new types of transfer artefacts made of monocrystalline silicon is described. The transfer artefacts build the basis for highly accurate calibrations of mass standards with a nominal mass of one kilogram under atmospheric conditions. The manufacturing focuses on two sorption artefacts, one duplex artefact that can be used as both a sorption and a buoyancy artefact, and one buoyancy artefact with a hollow chamber. The basic geometry of the transfer artefacts is composed of stackable discs with spherical spacers. The design considers all essential physical boundary conditions as well as the requirements for user-friendly handling. The tilt stability required for subsequent handling is being investigated. The challenges of processing a brittle material such as monocrystalline silicon are indicated. The suitability of silicon spheres for bearing is evaluated. The focus is on the challenging technical implementation of calotte bore for fixing the coupling spheres. For this purpose, different solder materials such as indium are examined for the applicability of a vacuum-tight connection and an own production set-up is built.

Manufacturing, monocrystalline silicon, transfer artefact, indium, soldering

1. Introduction

Transfer artefacts can be utilized for mass comparison measurements. Those measurements in vacuum and under atmospheric conditions convey conclusions about the surface contamination by e.g. water or hydrocarbons and systematic effects due to e.g. air buoyancy. The transfer artefacts discussed refer to a 1 kg silicon sphere as a reference standard. The surface of the reference sphere represents the minimum surface.

The transfer artefacts are divided into three different categories: a) sorption artefacts, b) duplex artefacts, c) buoyancy artefacts. Two sorption artefacts and two buoyancy artefacts are used as a set pair. All test specimens have the same nominal mass and surface finish (especially with regard to roughness) as the reference (sphere). In the following, designs with cylindrical artefacts whose surfaces differ as much as possible in terms of surface area must be determined for sorption artefacts. This results in 2-, 3- and an 8-disc artefact. The described sorption artefacts are equal in mass and density, which is realized by a disc-shaped design. Two variants of buoyancy artefacts can be used for the determination of the (air) buoyancy correction. Unlike the sorption artefacts, their nominal area is the same, but their density is different.

To achieve the greatest possible volume difference between the buoyancy artefacts, a standard with a cavity (hollow artefact) and a standard with an enclosed core of a denser material (inlay artefact) are designed.

Another category of transfer artefacts are so-called duplex artefacts. Due to their properties, these can be used to determine both sorption effects and buoyancy effects. Nominal mass and surface structure are similar to all other artefacts, including the reference. Duplex artefacts have the same nominal volume as sorption artefacts at a multiple of the surface area of the reference. Duplex artefacts are composed of a stack of discs like sorption artefacts.

2. Design requirements

The installation dimensions required for all transfer artefacts are uniform and result from the vacuum mass comparators used. The maximum radius of a cylinder is 0.045 m, which is specified by the installation geometry. The maximum usable installation height is 0.105 m. However, due to the complex handling in the comparator, a maximum height of 0.1 m is aimed for. Due to the mounting geometry, a minimum disc height of 0.015 m is recommended. The following densities are used as a calculation basis: Silicon 2 328.8 kg/m³ [1], Tungsten 19 250.0 kg/m³ [2] and Air 1.204 1 kg/m³ [3, 4]. The surface roughness of all artefacts should be in the range of 10^{-9} m, analogous to the reference standard. The geometry of the chamfers to be designed describes straight chamfers with an angle of 45° and a dimension of legs of 0.000 5 m. The accuracy of the calculation is defined as 10^{-12}.

A uniform basic geometry of disc is used for all transfer artefacts, which encourages the development of a uniform calculation approach and simplified manufacturing. A transfer artefact is made up of at least one disc, straight circumferential chamfer and a number of spherical spacers, so-called coupling spheres. Using the latter, a six-point bearing is achieved, which serves as a kinematic coupling [5, 6] and connects the individual discs with a defined gap height. Figure 1 shows a 2-disc artefact with silicon spheres embedded as spherical spacers. The coupling is composed of

three spacers placed in the upper disc and six spacers fixed in the lower disc.

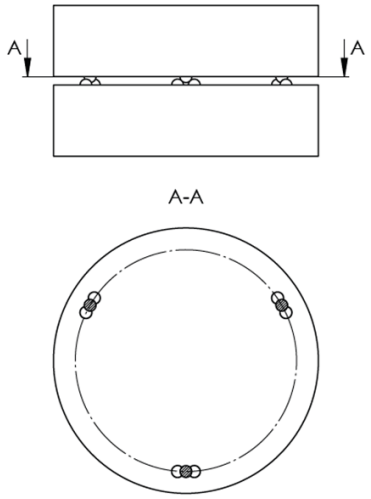

Figure 1. 2-disc artefact with coupling consisting of in sum nine spherical spacers

The stability for the assembly of the transfer artefacts, as well as the tilt stability during the loading of the comparators and during the weighing process, was determined experimentally for an angle of tilt of more than 30° [7]. The reproducible dismantling of the disc stacks enables efficient and comparable cleaning [8] to the reference. If a transfer artefacts consists of more than one disc body, a distinction is made between head, middle, and base disc(s) for the disc stack.

2.1. Specific requirements

Transfer artefacts enable the correction of systematic deviations and the calculation of a measurement uncertainty contribution during the substitution calibration of mass standards with different densities [9]. The aim is to determine the influence of the environment. High-quality 1 kg silicon spheres are used as a reference.

For the construction of transfer artefacts, the following manufacturing and handling requirements must be fulfilled, sorted by priority:

- equal nominal mass as the reference
- equal material and surface quality as the reference, natural monocrystalline silicon without amorphous surfaces
- nominal surface ratios from sorption artefacts to reference sphere should ideally be designed as integers (this supports the clear assessment of the sorption effects)
- considering geometric limitation of the measuring chambers within typical mass comparators, correlated parameters: total height and radius of the transfer artefacts
- practice-oriented assembly, taking into account the geometric mounting conditions of the comparators, this requires a special design of the base of artefacts
- easy demounting of the discs for efficient cleaning
- kinematic coupling by frictional connection of the discs to be stacked
- high tilt stability of the discs for transport and loading of the comparators

The transfer artefacts are used both under atmospheric conditions and under vacuum in mass comparators.

3. Manufacturing of discs and coupling spheres

The monocrystalline silicon spheres used for the coupling are to be manufactured from the same charge material as all other components. The production of the precision spheres (micro-quality specification according to DIN ISO 10110-11) with a diameter of 4.0 mm and a manufacturing accuracy of ± 0.001 mm was carried out by an external company [10].

The final processing of the transfer artefacts focused on determining the optimum widths of the calotte bore for fixing the coupling spheres. Three framework conditions had to be taken into account for this:

- the coupling spheres used must have a strong grip so that they remain attached when the discs are assembled or when they are cleaned
- the coupling spheres must ideally protrude from the discs as a hemisphere in order to comply with the mathematical specifications for surface definition
- the surface of the solder visible from the outside (seam) should be as small as possible and concentric in order to keep disturbing sorption effects small and to be able to better calculate their surface influence with regard to sorption effects

The last requirement in particular leads to the fact that a chamfer should be avoided in the calotte bore. Due to the brittle silicon material, it could not be avoided that unwanted breakouts occur at the edges during processing. Therefore, various investigations into drilling were carried out. Finally, no external company could be found that had a suitable process for manufacturing the bores without major chipping. This would have resulted in annular chamfers with radius fractions of more than 2 mm. This would have led to greater measurement uncertainty due to sorption properties that are difficult to determine. In order to circumvent these disadvantageous effects, manufacturing processes were developed and tested at PTB with the aim of producing chamfer-free calotte bores. The following criteria were defined for the preliminary investigations:

- low breakout chamfer-free edges
- adhesive surface preparation
- roughness of the drilling surface
- geometry of the bore for positioning of the sphere

First, the manufacturing processes could be controlled by milling with a single-edged monocrystalline diamond in such a way that significant breakouts larger than 200 µm were prevented. For this purpose, the cutting parameters (speed= 42 000 1/min, feed in X, Y = 50 mm/min, feed in Z = 15 mm/min) of the radius cutter (r= 1 mm, monocrystalline diamond) were optimized empirically.

Furthermore, the wear of the tool and thus the dimensional accuracy of the required bores was investigated. The bores examined with a Single-axis measuring sensor (Mahr single-axis depth gauge (30 mm long, 0.3 mm radius) showed that the sphericity deviated by 2- 3 µm due to the low wear.

To remove contamination in the bore, such as small particles, the silicon surfaces were cleaned with acetone.

In order to optimize the bonding properties of a solder, bores with roughened and polished recess surfaces were investigated. Manually performed load tests showed that surfaces with a roughness of approx. Ra= 100 nm provide the best grip.

For a centered position of the spheres, the geometry of the calotte bore was changed. To ensure a constant height of the spheres, a plane was made instead of a pole as the lowest point of the bore. As a result, all spheres rise out of the bore with one hemisphere. In addition, the calotte bores could be made as required without a circumferential chamfer and with breakouts averaging 0.05 mm at the transitions of the surfaces to be polished. The following figure 2 shows an example of a spherical bore with characteristic breakouts and without a circumferential chamfer taken with a digital microscope (Leica DVM6).

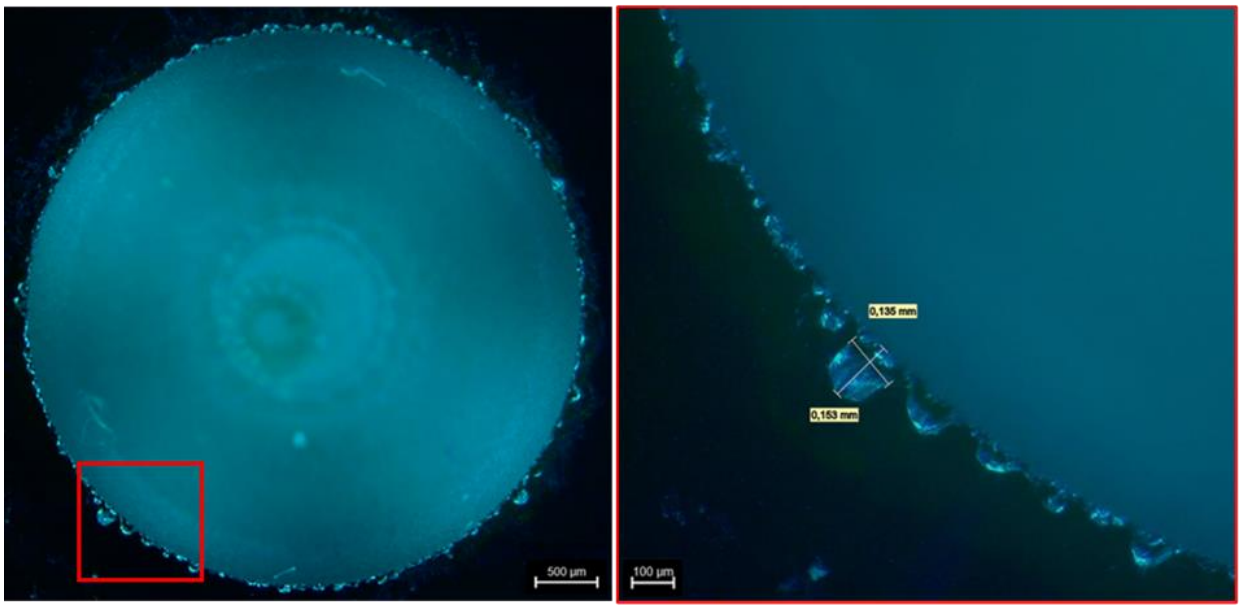

Figure 2. Characteristic breakouts of a spherical bore without circumferential chamfer embedded in a polished silicon disc

4. Solder connections for coupling

At an early stage of development, a decision had already been made in favor of a soldered connection for fixing the coupling spheres, as these ensure sufficient bonding and, compared with adhesives, do not outgas under vacuum conditions in mass comparators. In addition, soldered connections were expected to ensure the desired long-term stability. In addition to the optimum gap width and position of the coupling spheres mentioned above, there was now the question of using a suitable solder. This was of particular interest since the coupling spheres are located on both the surface and the undersurface of a disc. Two options were thus available, the use of solders with different melting temperatures, so that the spheres are attached in two production steps, or cold welding.

An external company first tested the bond by means of bonding with two solder compounds with different melting points. The solder with higher melting point at 230 °C, and the other solder with a melting point of about 160 °C. The exact melting temperatures and textures of the solders were not provided by the company. The process is based on first connecting one side of a disc with solder and spheres and in a second process step using the solder with the lower melting point for the other side of the disc with spheres. This was to ensure that the spheres on the first side of the disc would not be released from the disc again when the melting temperature was reached. As a result, however, the bond proved to be unstable. Furthermore, the required surface quality of the visible seam around the spheres could not be achieved. The spheres were not centered in the bores and were also at different depths in the bore.

The unknown solder tested, with a melting point of approx. 160 °C, suggests a compound with indium, the melting point which is 157 °C. A literature search also revealed that pure indium has long been used for seals in the ultra-high vacuum range [11]. First investigations on indium seals were described in 1954 by Belser [12] and later by Turner et al [13] and especially the use of indium O-rings by Turkington et al [14]. The thickness of the pure indium used has been repeatedly reported as approx. 0.5 mm and demonstrated by Kaufmann et al [15] with a helium leakage test for high vacuum use using a mass spectrometer. In this test, indium produces a compression seal due to its low elastic modulus (10.5 GPa) [16]. Furthermore, polished surfaces of vacuum components together with indium O-rings are shown to provide a reliable seal [15].

Based on the findings of the external partner and the literature research, further tests were carried out at PTB to investigate the wetting and flow behavior of different solders. For this purpose, the following solders examined in the table below were investigated.

Table 1 Investigated solder materials

Solder	Melting point	Flow behavior/wetting
52In48Sn	118 °C	+
97In3Ag	146 °C	++
100In	156 °C	+++
95Sn3.5Ag1.5In	218 °C	+
80Au20Sn	280 °C	+

The wetting and flow behavior was investigated on five different solders with melting points between 118 °C and 280 °C. The aim was to determine a solder with a low melting point and good flow properties on a silicon surface. For this purpose, the solders were heated between two Si wafers close to the respective melting temperature. Best wetting for the applications without mechanical stress, as required in this work, was obtained with 100In solder (purity 99.995 %) [17]. Solders with lower or higher melting points did not show optimal wetting of the Si wafers. As an alternative to 100In, 97In3Ag

showed lower melting temperature but higher viscosity, so this solder would be suitable for applications with mechanical stress. Another advantage of 100In is that the material is readily rollable at room temperature and has very good deep-drawability. Since it remains malleable even when machined, it is very well suited for cold welding. Another advantage of cold welding is that oxide layers have less influence on the wetting and adhesion properties. As a pure element or alloy, indium is therefore known for its good wetting of oxides.

The optimum material thickness for processing the indium was determined experimentally. For the best form fit, it is particularly important to preform the calotte holes in order to optimally fill the calculated gap distance between the sphere and the silicon disc. An indium sheet rolled to a thickness of approx. 0.3 mm showed the best forming properties. At material thicknesses of less than 0.1 mm, indium is too soft for machining and no longer comes off a roll without tearing

On the other hand, material thicknesses between 0.5 - 0.6 mm are disadvantageous because the material can no longer be deep-drawn. The rolled and preformed indium is cleaned with acetone for better adhesion preparation and etched in 10 % hydrochloric acid. In a first approximation, about 40.11 mg ± 3 µg of indium are introduced per calotte hole [18]. Figure 3 shows the lower disc of a 2-disc artefact with six silicon spheres embedded as spherical spacers.

Figure 3. Lower disc of a 2-disc artefact with six silicon spheres fixed with 100In

After the coupling spheres were connected to a disc by indium, the stability of the connection could be checked. Firstly, for vacuum suitability for 48 hours at 5 - 10^{-6} mbar and secondly via cleaning by means of an ultrasonic bath at two different frequencies (135 Hz and 35 Hz) for two times 30 seconds. In both tests, there was no effect on the solder connection of the coupling spheres.

5. Summary

The design strategy and related parameters for sorption and buoyancy transfer artefacts are explained. Main focus is given on the geometrical design and technical implementation of the transfer artefacts.

In order to provide user friendly transfer artefacts, a dismountable, highly reproduceable coupling was presented that allows the disc stack to be fixed with minimum risk of surface damage and sufficient inclination stability.

Special attention is given to the investigation of suitable solder connections for the designed coupling. The technical implementation for chamfer-free bores without significant breakouts in monocrystalline silicon are explained.

References

[1] D. Eppers, PTB internal density determination by hydrostatic weighing at 20 °C, May 2020

[2] N. Greenwood, A. Earnshaw, Chemie der Elemente, Edition 1, VCH, Weinheim, ISBN 3-527-26169-9, S. 1291, 1988

[3] M. Gläser, R. Schwartz, M. Mecke, Experimental determination of air density using a 1 kg mass compara-tor in vacuum, *Metrologia* **28** 45–50, 1991

[4] A. Picard et al., Revised formula for the density of moist air (CIPM-2007), *Metrologia* **45**, 149, doi. 10.1088/0026-1394/45/2/004, 2008

[5] PTB; Inventor Härtig, Frank; Hirsch Jürgen; Stein, Martin; Lin Hu: Präzisionsaufnahme; internal invention disclosure, 0454218DE1, 2014

[6] A.-K. Wiemann, M. Stein, K. Kniel, Traceable metrology for large involute gears, *Journal of Precision Engineering* **55**, Pages 330-338, doi. 10.1016/j.precisioneng.2018.10.001, January 2019

[7] K. Lehrmann, PTB internal experimental tilt stability investigation with variable stacking of differently arranged spherical spacers, May 2020

[8] J. W. Chung, V. Görlitz, M. Vogtmann, E. Beyer, F. Härtig, The PTB Cleaning Procedure for Silicon Spheres, Version 1.01, June 20, 2016

[9] OIML Recommendation R111-1 Weights of classes E1, E2, F1, F2, M1, M1–2, M2, M2–3 and M3 (Paris, France: BIML), 2004

[10] J. Hauser GmbH & Co. KG, www.hauser-optik.de, Steinstraße 4 a, 35606 Solms, 2022

[11] U. Hochuli and P. Haldemann, Indium Sealing Techniques, *Review of Scientific Instruments* **43**, 1088, doi 10.1063/1.1685850, 1972

[12] Belser: R. B. Belser, *Review of Scientific Instruments* **25**, 180, 1954

[13] J. A. Turner, R. M. Pickard, G. R. Hoffman, Ultra-high vacuum system, *Journal of Scientific Instruments* **39**, 26, 1962

[14] R. R. Turkington, R. F. Harris-Lowe, Note on the design of simple indium O-ring Seals, *Review of Scientific Instruments* **55**, 803, doi. 10.1063/1.1137806, 1984

[15] D. Kaufmann, T. Collath , M.T. Baig, P. Kaufmann, E. Asenwar, M. Johanning, C.Wunderlich, Thick-film technology for ultra-high vacuum interfaces of micro-structured traps*, Appl Phys B*, **107**:935–943, doi 10.1007/s00340-012-4951-7, 2012

[16] M. Merkel, K.-H. Thomas, Taschenbuch der Werkstoffe, 7th edn., Carl Hanser, Munich, 2008

[17] Haines & Maassen, Indium 99,995 %, Charge 21-4348, Origin China, Analyse 23.07.2021

[18] R. Meess, PTB internal test on five spheres to which indium has been added, balance used Sartorius SE 2, November 2022