euspen's 19th International Conference & Exhibition, Bilbao, ES, June 2019
www.euspen.eu

Analytical model of the force between a rectangular coil and a cuboidal permanent magnet

Anlin Chen[1, 2], Ming Zhang[1, 2], Yu Zhu[1, 2], Zhouyu Huai[1, 2], Kaiming Yang[1, 2]

[1]*State Key Laboratory of Tribology, Department of Mechanical Engineering, Tsinghua University, Beijing, 100084, China*
[2]*Beijing Key Lab of Precision/Ultra-precision Manufacturing Equipments and Control, Tsinghua University, Beijing, 100084, China*

zm01@mails.tsinghua.edu.cn

Abstract
In this paper, the model of the electromagnetic force between a rectangular coil and a cuboidal permanent magnet is proposed, which could be used in the deformation suppression of the mover in the magnetically levitated ironless planar motor. Based on the equivalent current method, the permanent magnet is represented by an equivalent surface current on the four sides of the permanent magnet. Then, the coil is simplified to a rectangular line current. Based on Biot-Savart law, the magnetic field model of the rectangular line current is obtained. Therefore, the coil is represented by the magnetic field model. According to Lorentz law, the force between the coil and the permanent magnet is derived from the equivalent surface currents and the magnetic field model. Finally, the force model is verified by FEM simulations.

Electromagnetic force model; equivalent current method; rectangular coil; cuboidal permanent magnet

1. Introduction

In lithographic tools, the conventional configuration of the wafer stage consists of a short-stroke stage on top of a long-stroke stage. To make this configuration more compact and simple, the monolithic stage actuated by the magnetically levitated ironless planar motor (MLIPM) is being researched[1]. The MLIPM consist of a stator with a coil array and a mover with a permanent magnet array. To satisfy the increasing requirements in throughput of lithographic tools, lightweight structure is highly desirable for the mover of the MLIPM. Lightweight structure leads to more severe flexible deformation of the mover, which will decrease the motion accuracy. The deformation of the mover can be suppressed by the electromagnetic force generated form each permanent magnet in the permanent magnet array[2]. However, the force models in existing literatures are mainly for the electromagnetic force between the whole permanent magnet array and each coil in the coil array [3]. Therefore, these force models cannot be used in the deformation suppression.

In this paper, the model of the electromagnetic force between a rectangular coil and a cuboidal permanent magnet is proposed. According to this model, the electromagnetic force between each permanent magnet and the whole coil array could be derived, which could be used in the deformation suppression.

2. Electromagnetic force model

A rectangular coil and a cuboidal permanent magnet are shown in figure 1. A coordinate system O-XYZ is fixed on the coil. The X axis, the Y axis and the Z axis is along the center lines of the sides of the rectangular coil. The lengths of the sides along the X axis and the Y axis are a and b, respectively. The lengths of the sides of the permanent magnet is m, n, and l, respectively. The coordinate of the center of the permanent magnet is (p_x, p_y, p_z).

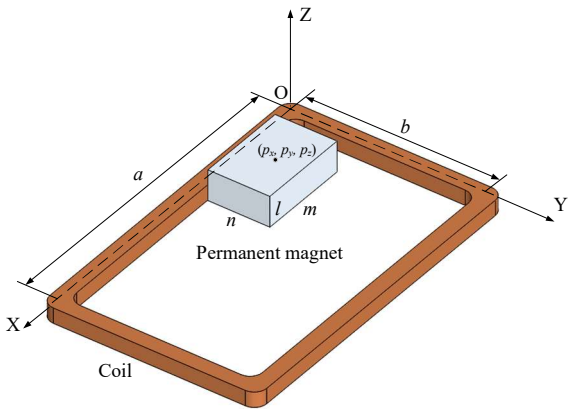

Figure 1. A rectangular coil and a cuboidal permanent magnet.

Firstly, the permanent magnet is represented by an equivalent surface current on the four sides of the permanent magnet. Secondly, the coil is simplified to a rectangular line current, and the magnetic field model of the rectangular line current is obtained. Therefore, the coil is represented by the magnetic field model. Finally, the electromagnetic force between the coil and the permanent magnet is derived from the equivalent surface current and the magnetic field model.

2.1. Modeling of the PM based on the equivalent current method

In the cuboidal permanent magnet, the four side surfaces are denoted as S_1, S_2, S_3, and S_4, respectively. I_1 is a surface current flowing in S_1, S_2, S_3, and S_4. According to equivalent current method[1], the magnetic field generated from the permanent magnet is equivalent to the magnetic field generated from the surface current I_1, and the surface density of I_1 is J

$$J = \frac{B_r}{\mu_0} \tag{1}$$

where, B_r is the remanent flux density of the permanent magnet and μ_0 is the permeability of free space.

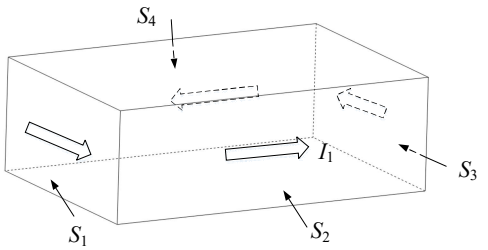

Figure 2. The equivalent surface current of the cuboidal permanent magnet.

2.2. Modeling of the magnetic field of the coil based on Biot-Savart law

As shown in figure 3, the current in the rectangular coil is simplified to a line current I_2 which is flowing in the center lines of the sides of the rectangular coil.

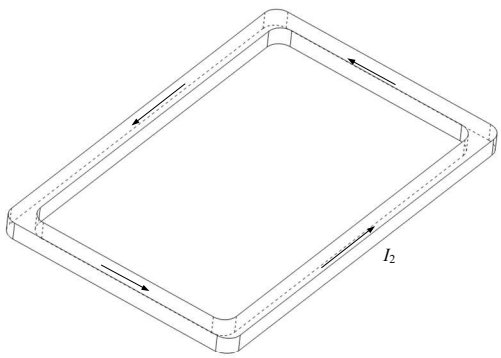

Figure 3. The equivalent line current of the rectangular coil.

According to Biot-Savart law, the x-component, the y-component and the z-component of the magnetic flux density of the line current I_2 are given by

$$B_x(x,y,z) = Kz\frac{\frac{b-y}{\sqrt{(a-x)^2+(b-y)^2+z^2}}+\frac{y}{\sqrt{(a-x)^2+y^2+z^2}}}{(a-x)^2+z^2} - Kz\frac{\frac{b-y}{\sqrt{x^2+(b-y)^2+z^2}}+\frac{y}{\sqrt{x^2+y^2+z^2}}]}{x^2+z^2} \tag{2}$$

$$B_y(x,y,z) = Kz\frac{\frac{a-x}{\sqrt{(a-x)^2+(b-y)^2+z^2}}+\frac{x}{\sqrt{x^2+(b-y)^2+z^2}}}{(b-y)^2+z^2} - Kz\frac{\frac{a-x}{\sqrt{(a-x)^2+y^2+z^2}}+\frac{x}{\sqrt{x^2+y^2+z^2}}}{y^2+z^2} \tag{3}$$

$$\begin{aligned} B_z(x,y,z) = &-K\frac{(a-x)[\frac{-b+y}{\sqrt{(a-x)^2+(b-y)^2+z^2}}-\frac{y}{\sqrt{(a-x)^2+y^2+z^2}}]}{(a-x)^2+z^2} \\ &-K\frac{(b-y)[\frac{-a+x}{\sqrt{(a-x)^2+(b-y)^2+z^2}}-\frac{x}{\sqrt{x^2+(b-y)^2+z^2}}]}{(b-y)^2+z^2} \\ &+Kx\frac{\frac{b-y}{\sqrt{x^2+(b-y)^2+z^2}}+\frac{y}{\sqrt{x^2+y^2+z^2}}]}{x^2+z^2} \\ &+Ky\frac{\frac{a-x}{\sqrt{(a-x)^2+y^2+z^2}}+\frac{x}{\sqrt{x^2+y^2+z^2}}]}{y^2+z^2} \end{aligned} \tag{4}$$

where, $K = \frac{\mu_0 I_2}{4\pi}$.

2.3. Modeling of the electromagnetic force

Based on the equivalent surface current and the magnetic field model, the electromagnetic force on the cuboidal permanent magnet is derived by Lorentz law

$$\begin{aligned} \vec{F} = (F_x\vec{i}, F_y\vec{j}, F_z\vec{k}) = &\int_{S_1+S_2+S_3+S_4} \vec{I}_1 \times \vec{B}(x,y,z)\mathrm{d}S \\ = J&\int_{p_z-\frac{l}{2}}^{p_z+\frac{l}{2}}\int_{p_y-\frac{n}{2}}^{p_y+\frac{n}{2}} (B_z\Big|_{x=p_x+\frac{m}{2}}\vec{i}, 0, -B_x\Big|_{x=p_x+\frac{m}{2}}\vec{k})\mathrm{d}y\mathrm{d}z \\ +J&\int_{p_z-\frac{l}{2}}^{p_z+\frac{l}{2}}\int_{p_x-\frac{m}{2}}^{p_x+\frac{m}{2}} (0, B_z\Big|_{y=p_y+\frac{n}{2}}\vec{j}, -B_y\Big|_{y=p_y+\frac{n}{2}}\vec{k})\mathrm{d}x\mathrm{d}z \\ +J&\int_{p_z-\frac{l}{2}}^{p_z+\frac{l}{2}}\int_{p_y-\frac{n}{2}}^{p_y+\frac{n}{2}} (-B_z\Big|_{x=p_x-\frac{m}{2}}\vec{i}, 0, B_x\Big|_{x=p_x-\frac{m}{2}}\vec{k})\mathrm{d}y\mathrm{d}z \\ +J&\int_{p_z-\frac{l}{2}}^{p_z+\frac{l}{2}}\int_{p_x-\frac{m}{2}}^{p_x+\frac{m}{2}} (0, -B_z\Big|_{y=p_y-\frac{n}{2}}\vec{j}, B_y\Big|_{y=p_y-\frac{n}{2}}\vec{k})\mathrm{d}x\mathrm{d}z \end{aligned} \tag{5}$$

where F_x, F_y, and F_z are the the x-component, the y-component and the z-component of the electromagnetic force, respectively.

3. Verification

As shown in figure 4, the *x*-component of the electromagnetic force calculated by the electromagnetic force model is denoted as F_x-ANA, and the FEM simulations result is denoted as F_x-FEM. At different p_x, F_x-ANA and F_x-FEM show good correspondences, which validates the analytical model.

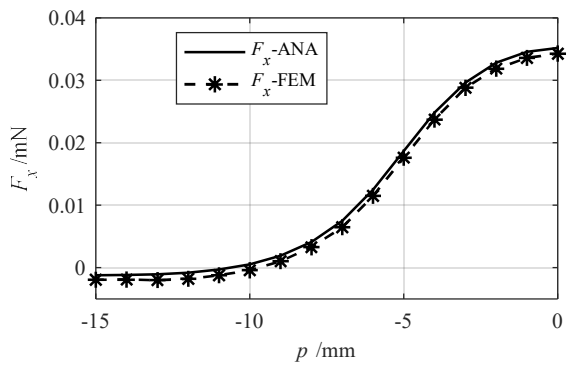

Figure 4. Comparisons of the electromagnetic force of the analytical model and the FEM simulations result.

4. Conclusion

In this paper, the cuboidal permanent magnet can be represented by equivalent surface currents. The rectangular coil can be simplified to a rectangular line current. The model of the electromagnetic force between the rectangular coil and the cuboidal permanent magnet is proposed. Finally, the proposed model is validated by FEM simulations.

References

[1] Rovers J M M 2013 Eindhoven University of Technology Doctor's thesis

[2] Rovers J M M, Achterberg J, Ronde M J C, Jansen J W, Compter J C , Lomonova E A, Lierop C M M van, Mechatronics 23 233-239

[3] Jansen J W, Lierop C M M van, Lomonova E A, and Vandenput A J A, IEEE Trans. Magn., 43 15