euspen's 19th International Conference & Exhibition, Bilbao, ES, June 2019
www.euspen.eu

Investigations of different compliant manipulator concepts for a high-precise rotational motion

Philipp Gräser[1], Sebastian Linß[2], Lena Zentner[2], René Theska[1]

Technische Universität Ilmenau, Department of Mechanical Engineering
[1]Institute of Design and Precision Engineering, Precision Engineering Group
[2]Compliant Systems Group

E-Mail: philipp.graeser@tu-ilmenau.de

Abstract
Due to their advantages over conventional mechanisms, compliant mechanisms with notch flexure hinges are state of the art in precision engineering and micro systems technology. These compliant mechanisms are often used in positioning and adjustment applications with up to six degrees of freedom. In addition to the translational motions, as they are mainly required in linear tables and planar stages, also rotational motions are needed. For the realization of a high-precise rotation by compliant manipulators certain concepts with different complexity are existing. One approach is the use of flexure hinges with different geometrical parameters and notch shapes, which can be purposefully optimised depending on the requirements of the specific application. Another approach is the use of compliant mechanisms, in which the instantaneous centre of rotation represents the axis of rotation of the guided link either according to the remote centre of compliance concept or within the mechanism design space itself. In addition, a novel concept using a specific configuration of a four-bar mechanism, in which two adjacent links are of an equal length is presented in this contribution. The different approaches are compared by means of kinematic investigations and FEM-based simulations and the potential regarding a high-precise rotation with path deviations in the low micrometre range is shown.

Keywords: Compliant mechanism, flexure hinge, rotational motion, positioning system, adjustment, path of motion

1. Introduction

In a large field of precision engineering applications, compliant mechanisms [1] with notch flexure hinges [2] are the basis of motion systems [3]. Depending on the application different types of motion and different numbers of axes of motion are needed. In previous investigations, the motion paths are reflected, which are approximated by a straight line [4, 5]. For adjustments of angular parameters rotational motions are also needed. The output link of the system should move on a path of motion with an instantaneous centre of rotation as stationary as possible, wherefore the remote centre of compliance concept is used in most cases, e.g. [6, 7].

The design process of compliant mechanism offers approaches to increase the motion accuracy of the whole system. This starts with the synthesis of the rigid-body model and goes further to the geometric design of the flexure hinges. The complexity and the expenditure of time depend on the requirements of the application. For rotational motions there are two general approaches for the design process. The first is the use of single flexure hinges and the second is the use of combinations of flexure hinges in a compliant mechanism. The latter approach is more complex but gives more flexibility in the design to influence the position of the instantaneous centre of rotation. Due to the higher number of flexure hinges the overall stiffness is higher and thus restoring forces can be increased. The sensitivity against lateral forces is decreased.

The flexure hinges can be designed as prismatic flexure hinges with symmetric notches, with asymmetric notches or much more complex as shown in the literature [8, 9]. In this investigation only symmetric notch flexure hinges are reflected due to an intuitive synthesis process. Furthermore, this type is much more practicable for the manufacturing process.

2. Rotational axis shift of single notch flexure hinges

Flexure hinges are materially coherent parings of two or more links. In the presented investigation the hinge is considered as a monolithic construction. In this case, the flexibility is achieved by goal-oriented weakening of the bending stiffness by two notches. Regarding the design process, there are different geometrical parameters of a flexure hinge, see Figure 1.

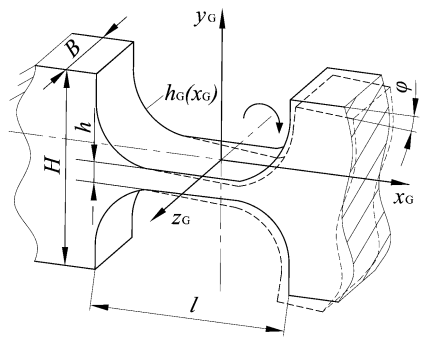

Figure 1. Geometrical parameters of a flexure hinge: H – hinge overall height, B – hinge width, l – hinge length, h – hinge minimum height, $h_G(x)$ – function of the notch contour, φ – rotation angle

During the deformation of a flexure hinge there is always a shift of the rotation axis and thus a deviation compared to the ideal circular path of motion. The deviations of all hinges in a compliant mechanism are of influence to the path deviations of coupler points. For high-precision applications this can be

minimised by the variation of the hinge contours. There are different approaches for determining the shift of the rotation axis $\overrightarrow{v_D}$. One suitable definition is the fixed centre approach according to [10], which is used here as shown in Figure 2.

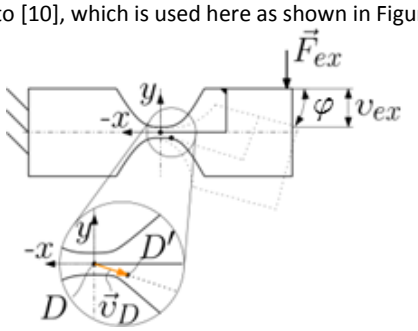

Figure 2. Parameters of motion of a flexure hinge: v_D – shift of the rotation axis, F_{ex} – input force for deflection, v_{ex} – x-deflection, φ – rotation angle

The function which represents the notch contour $h_G(x)$, see Equation 1, enables different possibilities for the purposeful design. Common contours are the semi-circular (Fig. 3a) and the corner-filleted contour (Fig. 3b). For the semi-circular contour the shift of the rotation axes is smaller than for the corner-filleted contour. But the range of motion is much more limited for the semi-circular contour. The decision for a contour is a compromise between this two motion properties. An alternative is the use of highly variable power functions for the notch contour, like shown in Figure 3c (cf. [10]).

$$h_G(x) = \frac{h}{2} + \frac{\left(\frac{H}{2}-\frac{h}{2}\right)}{\left(\frac{l}{2}\right)^n} \cdot x^n \qquad (1)$$

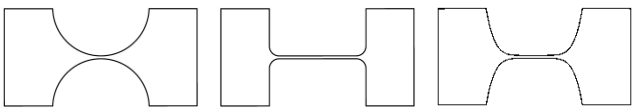

a) b) c)

Figure 3. Flexure hinges with different notch contours: a) semi-circular contour, b) corner-filleted contour and c) power function contour (n=4)

With regard to the precision and the possible stroke of the compliant mechanism the following geometric parameters have to be considered:

- the hinge length ratio $\beta_l = l/H$,
- the hinge height ratio $\beta_h = h/H$ and
- the used order n of the power function.

The exponent n of the power function allows to influence the principal shape of the hinge contour and thus to increase the range of motion by increasing n. However, the shift of the axis of rotation also increases with an increasing n. It therefore represents many possible solutions between a semi-circular and a corner-filleted contour. This offers the opportunity of a more specific design according to present load cases and boundary conditions.

3. Investigations of the instantaneous centre of rotation of different four-bar mechanisms

In the case that the motion properties of a single flexure hinge are insufficient, it is possible to use different combinations of flexure hinges that build a compliant mechanism. These compliant mechanisms offer the possibility to compensate the occurring deviations in the path of motion.

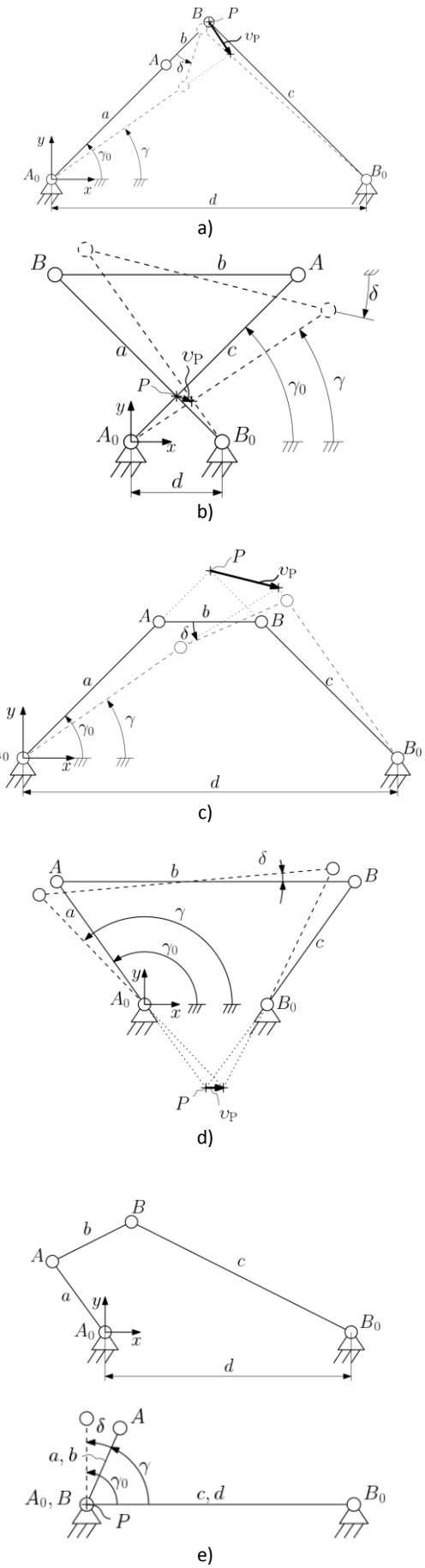

Figure 4. Investigated mechanisms for a rotational motion of the guided link b related to the instantaneous centre of rotation P: a) to e) five different rigid-body models of four-bar mechanism

Table 1. Geometrical parameters and initial position for the investigated five rigid-body models presented in Figure 4

Mechanism	a)	b)	c)	d)	e)
a in mm	142.55	12	107.14	107.14	optional
b in mm	12	8.49	8,49	160	= a
c in mm	41.41	12	107.14	107.14	optional
d in mm	160	8.49	160	8.49	= c
γ_0 in °	15	45	45	135	0-180

The compliant mechanisms can be designed in a way that the position of the instantaneous centre of rotation of the rotated link can be placed outside of the mechanism design space, thus allowing large radii. In comparison to single flexure hinges, higher lateral forces can be absorbed. The restoring forces are higher. A disadvantage is the higher effort and the required knowledge for the synthesis of the subsequently implemented compliant mechanisms.

With regard to a general synthesis method, it is useful to utilize suitable rigid-body models and to transform them into compliant mechanisms by replacing the ideal pivot joints by flexure hinges. Examples of four-bar mechanisms for a rotational motion of the guided link are shown in Figure 4.

At the beginning of the suggested synthesis, rigid-body models are selected from databases or newly designed. Afterwards, kinematic simulations are made based on these models. The trajectory of a specific point or link can be evaluated based on the geometrical parameters of the model. In the design process boundary conditions, such as design space and required stroke of motion, are already integrated. Moreover, the shift of the instantaneous centre of rotation v_P can be used as a criterion to evaluate the accuracy of a rotational motion. The results for the five investigated mechanisms are shown in Figure 5. It is obvious, that for some mechanisms the large shift of instantaneous centre is not appropriate for precision applications.

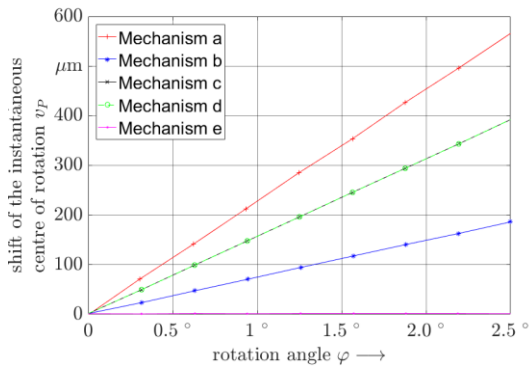

Figure 5. Simulation-based results for the shift of the instantaneous centre of rotation v_P of the rigid-body models of the five different mechanisms

4. Implementation and FEM-based investigation of two selected compliant mechanisms

For two of the five rigid-body models, the transformation and design of the compliant mechanisms is exemplarily shown. Mechanisms b) and e), see Figure 4, are selected because they are most promising regarding a precise rotation due to the investigations based on the rigid-body model. The ideal pivot joints are replaced by flexure hinges and linked by means of much stiffer link segments. The whole mechanism is designed monolithic, taking care that the manufacturability is given. Using a CAD model, 3D FEM simulations are then performed with ANSYS Workbench to compare the motion behaviour with that of the rigid-body model.

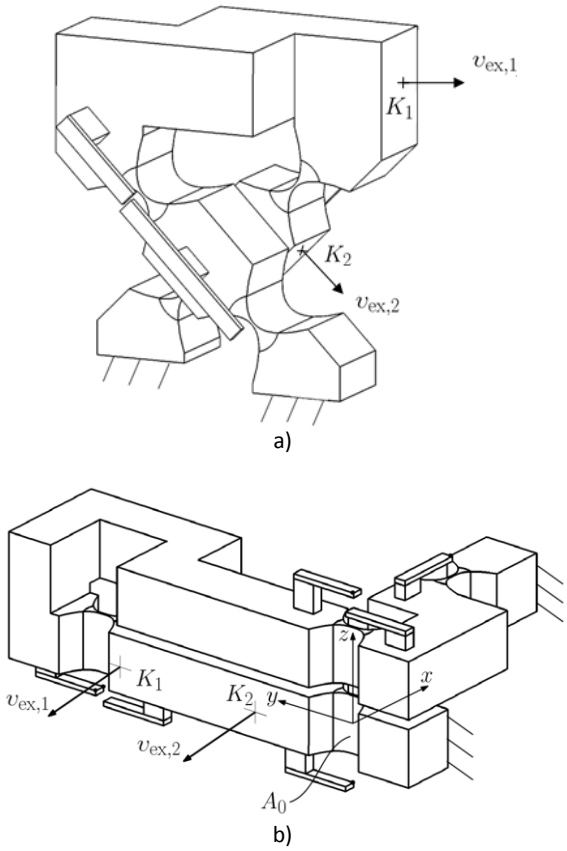

Figure 6. CAD models of the two investigated mechanisms with a large stroke of motion and a small shift of the instantaneous centre of rotation with optimised ratios for the flexure hinges (β_h = 0.03, β_l = 1): a) mechanism of Figure 4b with flexure hinges with n = 2 and b) mechanism of Figure 4e with flexure hinges with n = 3

In the FEM simulation, the two parts of the compliant mechanism marked in Figure 6 were fixed to the frame and the input force was applied in the positions marked with K_i. Large deformations were considered and a suitable fine mesh was determined with the use of mesh studies. The considered output motion in later applications, however, facilitates initial examinations and enables a direct comparison of the trajectories of the considered compliant mechanisms. The elements attached to the models in the form of small beams serve as markers to evaluate the rotational axis shift of each flexure hinge in the mechanism. Based on that, a conclusion can be drawn on the individual proportion to the total shift of the instantaneous centre of rotation. Thus, in later optimizations goal-oriented improvements by variation of the contour of the single flexure hinges can be done.

5. Results and discussion

There are different ways to validate the designed models with respect to their motion behaviour. On way is to verify the deviation between the rigid-body model, the single flexure hinge and the compliant mechanisms respectively. For this the parameters of the motion (deviations in *x*, *y* and *z* axes and the angles) are directly compared. Another way is to compare the path of motion of the designed compliant mechanisms directly with the request of the application.

In the presented investigations the diploid compliant mechanisms are designed based on the rigid-body models, while the latter are already designed with respect to a minimal

shift of the rotation axis or a minimal shift of the instantaneous centre of rotation. For this reason, as the main criterion for the evaluation of the created models, the absolute shift of the axis of rotation of the output link is evaluated and compared. The results for the single flexure hinges and for the two selected compliant mechanisms are shown in Figure 7.

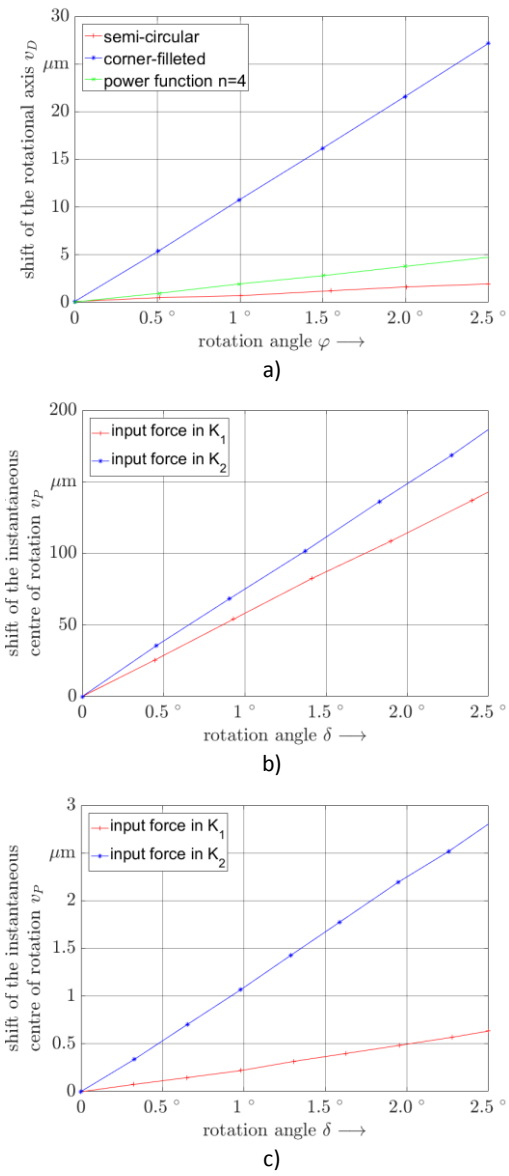

Figure 7. Results for the shift of the rotational axis respectively the shift of the instantaneous centre of rotation: a) for single flexure hinges, b) for the compliant mechanism of Figure 6a and c) for the compliant mechanism of Figure 6b ($\beta_h = 0.03$, $\beta_l = 1$)

The simulations show that it is possible to achieve an equally low shift of the centre of rotation with the help of the compliant mechanism of Figure 6b like with single flexure hinges. This can be seen when comparing Figures 7a and 7c.

Figure 7b clearly shows that the shift of the instantaneous centre of rotation for the mechanism of Figure 6a is higher than that of the considered single flexure hinges, but it is still in the range below 200 µm. If this accuracy is sufficient or if this deviation can be compensated or corrected in certain applications, the advantages outweigh the overall stiffness of the system. In contrast, mechanism Figure 6b thus offers the advantages of a wide range of variation of the position of the instantaneous centre of rotation, a higher restoring force and a higher robustness against lateral forces in comparison to single flexure hinges.

6. Conclusion and Outlook

The Investigations of different compliant manipulator concepts for a high-precise rotational motion show that both presented approaches of using single flexure hinges or of using compliant four-bar mechanisms are suitable for applications in precision engineering. The use of single flexure hinges has benefits with respect to a high accuracy of the path of motion with shifts of the rotation axes of only some micrometres. A precision into which only a few compliant mechanisms based on rigid-body models can invade. Some mechanisms, however, can achieve lower shifts of the instantaneous centre of rotation in certain specific configurations and initial positions, as demonstrated with one mechanism example. The overall benefit of the compliant mechanisms is the virtual instantaneous centre of rotation allowing a remote position, the higher stiffness in all spatial directions and a higher restoring force. This offers more flexibility in the design and a better integration in motion systems. The next step is to verify the simulation results by measurements on manufactured prototypes of the single flexure hinges and the presented compliant mechanisms.

The combinations of the scientific results drawn for translational and rotational motion are beneficial for the further optimisation of compliant mechanisms. They can be applied for the design and use of compliant manipulator concepts in precision engineering and precision measurement.

In further investigations, position systems with a very high resolution and repeatability in all six degrees of freedom will be designed, manufactured and tested.

References

[1] Howell L L, Magleby S P, Olsen B M: Handbook of Compliant Mechanisms, Wiley, Chichester, 2013.

[2] Tseytlin Y M: Notch flexure hinges: An effective theory, in: Rev. Sci. Instrum., 73, 3363–3368, doi:10.1063/1.1499761, 2002.

[3] Luo Y, Liu W, Wu L: Analysis of the displacement of lumped compliant parallel-guiding mechanism considering parasitic rotation and deflection on the guiding plate and rigid beams. in: Mech. Mach. Theory, 91, 50–68, doi: 10.1016/j.mechmachtheory.2015.04.007, 2015.

[4] Gräser P, Linß S, Zentner L, Theska R: Design and experimental characterization of a flexure hinge-based parallel four-bar mechanism for precision guides, in: Zentner L, Corves B, Jensen B, Lovasz E-C (Eds.), Microactuators and Micromechanisms, Vol. 45 of Mechanisms and Machine Science, Springer International Publishing, Cham, 139–152. doi:10.1007/978-3-319-45387-3_13, 2017.

[5] Gräser P, Linß S, Harfensteller F, Zentner L, Theska R: Large stroke ultra-precision planar stage based on compliant mechanisms with polynomial flexure hinge design, in: Proceedings of the 17th International Euspen Conference, 207–208, 2017.

[6] Ciblak N, Lipkin H: Design and Analysis of Remote Center of Compliance Structures. in: J. Robotic Syst., 20, 8, 415–428, doi:10.1002/rob.10096, 2013.

[7] Lei-Jie L, Zi-Na Z: Modeling and Analysis of a Compliance Model and Rotational Precision for a Class of Remote Center Compliance Mechanisms. in: App. Sci., 6 ,12, 388. doi: 10.3390/app6120388, 2016.

[8] Brouwer DM, Wiersma H, Boer S, Aarts R: Maximising stiffness over a long range of motion, in: MIKONIEK, 4, 24–20, 2013.

[9] Farhadi Machekposhti D, Tolou N, Herder JL: A Review on Compliant Joints and Rigid-Body Constant Velocity Universal Joints Toward the Design of Compliant Homokinetic Couplings, in: J. Mech. Des., 137, 3, 32301, doi:10.1115/1.4029318, 2015.

[10] Linß S, Schorr P, Zentner L: General design equations for the rotational stiffness, maximal angular deflection and rotational precision of various notch flexure hinges, in: Mech. Sci., 8, 29–49, doi:10.5194/ms-8-29-2017, 2017.