euspen's 16th International Conference & Exhibition, Nottingham, UK, May 2016
www.euspen.eu

Decision methodology of micro end-milling condition using tool catalog data-mining system

Hiroyuki Kodama[1], Koichi Okuda[1], Takuya Tsujimoto[1]

[1]*University of Hyogo, Graduate School of Engineering, Japan*
kodama@eng.u-hyogo.ac.jp

Abstract
Data-mining methods were applied to support decisions about reasonable micro end-mill cutting conditions (cutting speed, feed rate, axial depth of cut and radius depth of cut). The aim of this research was to excavate new knowledge with the mining effect by applying the data mining process of hierarchical and non-hierarchical clustering methods to micro end-mill tool catalogs. Micro end-mill shape element of catalog data were focused on visually grouped end-mills, which meant the ratio of tool shape dimensions. With these process, principal component analysis was used to quantify the correlation degree between cutting conditions and tool shape parameters. End-milling condition decision equations were derived from response surface method using significant predictor variables consisting of tool shape parameters and workpiece mechanical properties. The catalog-mining system appeared to be effective for mining knowledge hidden in a large amount of catalog data related to tool shape and end-milling conditions. Therefore, it appears to be straightforward for unskilled engineers to visually determine micro end-milling conditions from the tool shape. Moreover, short-delivery manufacturing with less waste may be possible.

Keywords: micro end-mill, tool catalog data, data-mining, hierarchical and non- hierarchical clustering

1. Introduction

In processing of microscopic contours, the machining of metals using micro end-mill with outside diameter of 1.0 mm or less is promising as processing technology that can result in low cost and quick delivery. In machining using a micro end-mill, the unique processing characteristics, such as size-effect which is generally not in other general purpose end-mills, has been revealed. Therefore, it is thought that the suitable cutting condition decision that can serve as an index of optimal condition search is difficult for engineers in the field.

While there has been extensive research related to micro end-mill processing mechanisms from the view point of tool wear, surface roughness, and cutting force [1], few studies have proposed an micro end-milling condition decision support system that gives systematic solutions. In this study, we extracted significant feature with the cutting condition decision support system (catalog data-mining system [2]) by using the tool maker catalogs that have a track record in the manufacturing and performance of micro end-mills.

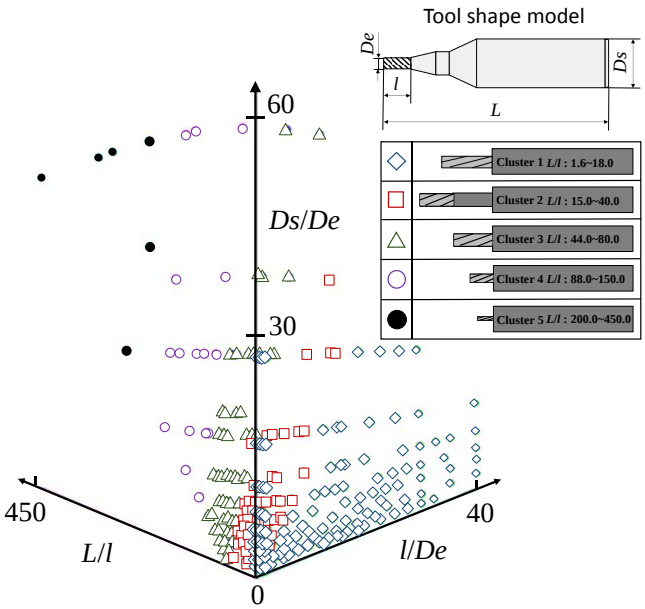

Figure 1. Distribution map of each cluster.

2. Catalog data-mining process

The first process applied in the catalog- mining process is data selection. In this process, data for cemented carbide micro end-mills with an outside diameter of 1.0 mm or less were obtained from a cutting-tool catalog listed in the 2015-2016 version of the catalog from tool makers A, B and C in Japan (Total number is 4177 pieces of data). The end-milling condition decision equations consist of end-mill shape parameters (end-mill diameter D, cut length l, overall length L, shank diameter Ds, number of flutes z, and helix angle ϑ) and material characteristics of the workpiece (thermal conductivity λ, young's modulus E, tensile strength σ_B, 0.2% yield stress $\sigma_{0.2}$, and machinability index MI) stored in the cutting-tool catalog as predictor variables and end-milling conditions recommended by cutting tool makers in the catalog as criterion variables. For the micro end-milling conditions, the micro end-mill catalogs were used to define the cutting speed V [m/min], feed rate f [mm/tooth], axial depth of cut Ad [mm] and radius depth of cut Rd [mm]. These conditions are defined as criterion variables. We selected carbon steel, alloy steel, quenching steel, aluminum alloy, copper alloy, titanium alloy, super-heat resisting alloy and austenitic stainless steel as the workpieces. The next process is data-cleansing, in which target data are grouped using the K-means method, a non-hierarchical clustering method. In the third process, variable cluster analysis as a hierarchical clustering method was used for statistical

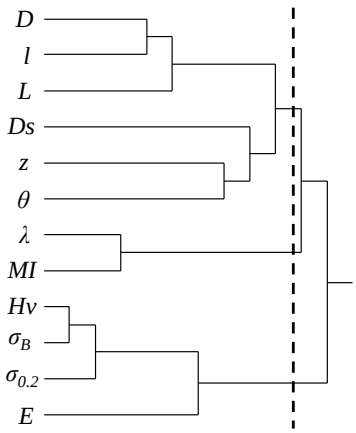

Figure 2. Tree diagram derived from variable cluster analysis.

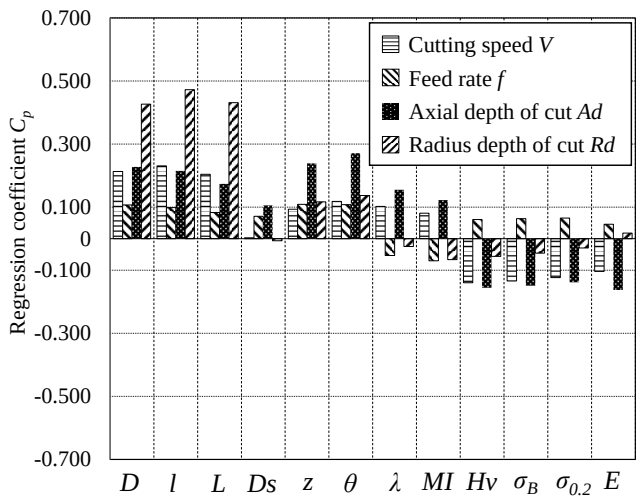

Figure 3. Analysis result of principal component regression.

analysis to create a hierarchical structure of the target data visualized using a tree diagram. Principal component regression was used to quantify the correlation between predictor and criterion variables. The response surface method was used to create end-milling condition decision equations for each cluster.

3. Catalog data mining results and discussion

We set three variables (*L*/*l*, *l*/*De*, and *Ds*/*De*) and visualized the shape of the micro end-mill using the K-means method. As shown in Fig. 1, all clusters have the tendency and characteristic tool shape, usage, and patterns. As an example, Fig. 4 shows the tree diagrams of Cluster 3, which mean the results of variable cluster analysis. Ward's method was used to calculate the distance after the clusters were combined to form cluster pairs. We can interpret the correlation for each variable by focusing on the groups to the left of the vertical dashed-dotted line (cutting line) in Fig. 2. The variables for Cluster 3 under side-milling and slotting are divisible into three groups: *D*, *z*, *Ds*, *L*, *l* (Tool shape parameters) and ϑ, λ and *MI*, *Hv*, σ_B, $\sigma_{0.2}$ and *E* (workpiece characteristic parameters). The closer to the left groups combine, the higher the correlation between the two variables. The vertical axis in Fig. 3 shows the regression coefficients (*Cp*) of Cluster 3 under slotting that quantify the correlation between predictor and criterion variables. *D*, *z*, *Ds*, *L*, *l* and *Hv*, σ_B, $\sigma_{0.2}$ and *E* have qualitatively the same tendency of correlation to each criterion variable in all clusters. In all clusters, the material-characteristics parameters (*Hv*, σ_B, $\sigma_{0.2}$ and *E*) showed negative correlation to the cutting conditions except *f*. We adopted a highly correlated predictor variable and dismissed the low variable to limit the variables of the three

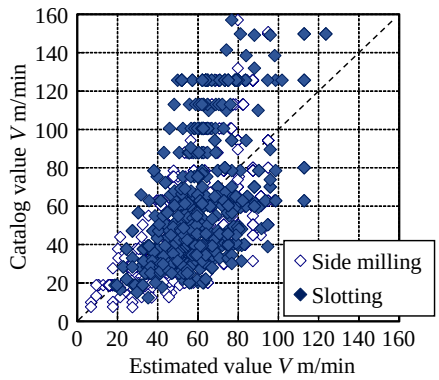

Figure 4. Relationship between estimated value and catalog value.

groups for the last time. The significant variables for Cluster 3 used in each equation were finally defined as ϑ, λ and *E* for *Ad*, *z*, *MI* and $\sigma_{0.2}$ for *f*, and *l*, *Hv*, λ for *V*.

4. Derivation of end-milling condition decision equations

From Figs. 2 and 3, we selected predictor variables that positively or negatively affected the criterion variables. We used derived ternary second-order polynomial response surface equations, which make up one of the most practical optimization methods [2]. For example, the end-milling condition decision equations for Cluster 3 under slotting are shown below.

$$A_d = -0.2\vartheta + 0.002\lambda + 0.003\vartheta^2 - 4.0\times10^{-5}\vartheta\lambda - 0.0001\vartheta E + 1.2\times10^{-5}E^2 + 3.0$$

$$f = -0.06z + 0.009z^2 + 8.0\times10^{-5}zMI - 8.7\times10^{-7}MI^2 - 4.4\times10^{-8}MI\sigma_{0.2} + 1.6\times10^{-9}\sigma_{0.2}^{\ 2} + 0.08$$

$$V = 45.8l - 0.06Hv - 6.8l^2 + 0.03l\lambda - 0.03lHv - 0.001\lambda Hv + 0.0001Hv^2 + 42.7$$

In Fig. 4, the horizontal axis shows the values estimated catalog-mining and the vertical axis shows the cayalog recommended *V* for Cluster 3. As shown in Fig. 6, no difference was observed in the value due to the difference in the processing method. However, in slotting of *f*, the recommendation conditions derived with the catalog-mining system were 50% of those derived from side milling. In slotting of *Ad*, with the same tendency, the recommendation conditions derived with the catalog-mining system were about 10% of those derived from side milling. Indicative end-milling conditions can be derived by substituting tool shape parameters and material characteristics for end-milling condition decision equations even though recommended end-milling conditions are unknown in the case of new material or new cutting tool.

5. Conclusion

We developed a process that uses both hierarchical and non-hierarchical clustering methods to mine data in micro end-mill catalogs. We derived micro end-milling conditions using end-milling condition decision equations derived from the catalog mining system. We found that catalog mining can be used to derive guideline cutting conditions for unskilled engineers and determine the tendency in end-milling condition decision.

References

[1] Kino H, Oda Y, Imada T, Nakagawa H, Ogawa K and Kojima H 2014 Basic Study on Micro End-milling – Cutting Phenomena of Side Cutting - *J. of SME-Japan.* **3** 6-10

[2] Kodama H, Hirogaki T, Aoyama E, Ogawa K and Okuda K 2014 Experimental Verification of End-Milling Condition Decision Support System Using Data-Mining for Difficult-to-Cut Materials *Advanced Materials Research.* **1017** 334-339