euspen's 16th International Conference & Exhibition, Nottingham, UK, May 2016
www.euspen.eu

Rotating sensor for new possibilities on Leitz Infinity coordinate measuring machine

C.Sanz[1,2], A.Cherif[1], H.Mainaud-Durand[1], K.Artoos[1], F.Morel[1], P.Morantz[2], P.Shore[2], J.Schneider[3], N.Steffens[3]

[1] *CERN, Meyrin (Switzerland)*
[2] *Cranfield University (United Kingdom)*
[3] *HEXAGON Metrology, Wetzlar (Germany)*

Email: Claude.Sanz@cern.ch

Abstract
A rotatory mount is being designed at CERN to determine the position of the axis of a 0.1 mm in diameter stretched wire with a sub-micron accuracy. As part of its role as world-wide leader in high energy particle physics, CERN is studying how to build a Compact Linear Collider (CLIC). One of the biggest challenges of this electron-positron collider is the alignment required for all the components acting on the beam: thousands of components will have to be assembled and aligned at the micrometre level. PACMAN, a study on Particle Accelerator Components Metrology and Alignment to the Nanometre scale, is a Marie-Skłodowska Curie Program supported by the European Commission (FP7 Program) whose aim is to develop and build a pre-alignment bench on which components are assembled and aligned to the required accuracy in one single step using a stretched wire as a reference [1]. During the process of this measurement, the axis of a stretched wire is aligned with respect to the reference axis of the components. The Cu-Be wire with a diameter of 0.1 mm considered for this project has been evaluated and its quality led to the conclusion that a form measuring sensor should be used to increase the precision of the measurement. The challenge is to measure the form error of this wire with 0.1 µm accuracy and its position with 0.5 µm precision on a Coordinate Measuring Machine (CMM). To do so, a rotary mount equipped with a non-contact sensor is designed with an opening in the radial direction. This paper introduces the requirements: no magnetic fields created, high accuracy on the positioning, low error motion, open on the side; and it describes and discusses the technical solutions: from the material to use to the bearings, including the kind of sensor.

Keywords: Metrology, Coordinate Measuring Machine, Measurement in magnetic environment, Non-contact probing, Form error measurement, Mechanics

1. Introduction

The scientific community wants to deeper understand the particles composing the Universe. The aim of the Compact Linear Collider is to increase the possibilities of discoveries.

The pre-alignment of this electron-positron accelerator is a technical challenge on which the PACMAN team is working, using a stretched wire as a reference. This wire is a copper-beryllium wire with a diameter of 0.1 mm. As this reference is not perfect, its form must be measured in order to reach the expected accuracy for the positioning of its axis.

Despite that non-contact form error measurements can be done within dedicated environments as well as within a CMM on samples with limited slopes, currently no sensor has been designed to measure the form error of a small element such as a stretched wire within a CMM. The study on the design and the requirements of such a system is described in this paper.

2. Context: Why use a rotary mount for adapting a non-contact sensor to a CMM?

The pre-alignment of the particle accelerator is done first by materialising the functional axis of an element with a stretched wire, second by measuring its axis position with respect to external reference markers, third by using these references in the tunnel. For the second step, the dedicated CMM at CERN is the Hexagon Manufacturing Intelligence Leitz Infinity. Currently, it does not have any rotary measuring part despite that a rotating sensor would be optimised for accurate non-contact measurement. The design described in this paper aims at providing this accurate rotary mount.

The mount needs to fulfil different specifications:

- as the sensor should measure the position of a 0.1 mm in diameter wire's axis with 0.5 µm repeatability, the motion error of the mount after mapping is expected to be smaller than 0.1 µm which implies high accuracy guiding bearings and a stiff material
- a high accuracy form error measurement sensor will be fixed on the mount
- the rotor's position must be known with the best possible accuracy (nanometre level) during the measurements, which is why an encoder system is needed
- the system must rotate so it includes an embedded motor
- as one of the elements considered for the alignment is a quadrupole magnet (see Figure 1), the assembly must withstand strong magnetic fields and should not create any field which may disturb the alignment
- it must not heat up the stabilised room
- it must be held by the CMM's head (weight < 1.2 Kg)

The methodology followed for this study is simple: the requirements for the rotary mount assembly have been defined and a study on the commercialised elements which could fulfil them has been started. The selected elements ordered will be tested individually as they are received, in order to be validated prior to being mounted. Then the assembly will be tested as a whole. The next chapter focuses on the details of the definition of the requirements and the beginning of the study of existing solutions.

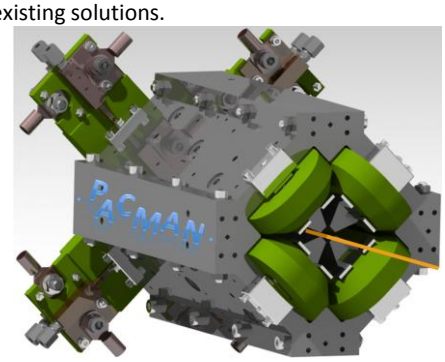

Figure 1. Artist view of the PACMAN quadrupole magnet with the wire.

3. The rotary mount's parts requirements and considered solutions

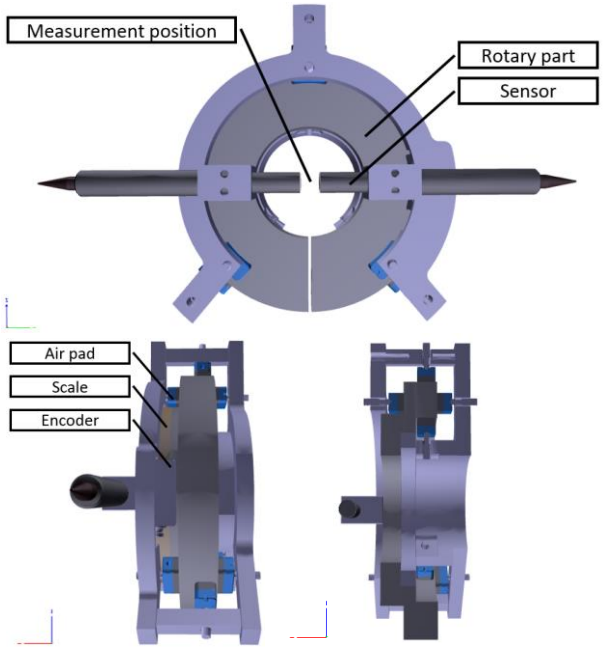

Figure 2. Front, side and cross-section views of a preliminary design of the rotary mount.

3.1 The sensor

The sensor must be able to measure the form error of 0.1 mm diameter cylindrical features with the best possible repeatability (< 0.1 µm); it must be as light and small as possible; it should be regulated in temperature by the environment of the CMM and it should withstand medium to strong magnetic fields (15 mT). Additionally, the cables linked to the sensor should not add to the rotor's weight a force greater than the stiffness of the rotor's guiding.

The evaluation of the existing technologies [2] led to the conclusion that the chromatic confocal technique [3] fulfils these requirements. Form error measurement tests are being performed in order to determine whether one sensor is sufficient or if two sensors are needed.

3.2 The encoder system

The encoder has a key role in the accuracy of the final rotary sensor. Indeed, the measurement accuracy relies on the high quality of the sensor's positioning during the measurement. To obtain this, synchronisation between the reading of the position and the reading of the distance provided by the sensor is essential, as well as high accuracy position reading. This means that the scale must be positioned so that it is reducing the Abbe error, that it should be fast in reading and sending the information, and that it should have the highest number of graduations enabling high angular resolution (< 2.10^{-6} degree). Additionally, the scale must also fit with the opening: it should not be a complete ring. Furthermore, as the rotary mount should be as small as possible due to the limited space available on the CMM, the scale should be adapted to a surface with a small radius of curvature. The reader's frequency must match the controller of the CMM, which limits the displacement speed.

A linear scale with a reading pitch of 20 µm, wrapped around the rotor, could fit with the application, with an adapted reader. Nonetheless, this implies a limitation in the rotor's radius which should be greater than the minimum bending radius of the encoder, and the tightening elements of the scale reduce the coverage of the rotation.

3.3 The motor

The motor must be as light and small as possible, it should withstand strong magnetic fields and should not create any. It must have a low power loss since passive cooling by the air stream of the CERN Metrology laboratory is required, and its displacements should be with a sub-micrometric resolution. Its torque must be larger than the maximum torque created by the shape of the rotor.

These requirements eliminate most of the existing motors, nevertheless, an edge piezo motor fits them. This kind of motor has very small dimensions; it is based on the friction force between a small piezo leg and a ceramic surface and is capable of bidirectional action. The leg is extended when the motor stops, which means that it blocks the rotation without any power consumption and without any vibration similar to what a servo would create. The drawback of this motor is the electronics which controls it, which must be integrated to the stator and may introduce heat to the mount.

3.4 The guiding bearings

Despite the opening in the rotor eliminating most of the possibilities for high precision guiding systems, the new air-pad technologies should make possible the guiding of this rotor. Indeed, the design is made with air-pads composed of a porous medium which allows working on a perforated surface without affecting dramatically the stiffness of the system.

Additional computations will be performed in order to determine the stiffness required for the motion error targeted: namely 0.1 µm after the correction of systematic errors. Moreover, there is a risk of collision between the rotor's bearing area and the air pads due to the opening in the rotor; it should be eliminated by adapting the shape of the rotor if possible, or by making the system stiffer using preloading air pads (the solution appearing on Figure 2).

3.5 The material

The material of the rotor must be light and stiff, non-magnetic and possible to machine to the required tolerances (< 2 µm radial and axial runout on the bearing surfaces). The path for the motor must be made out of ceramic (< 20 µm axial runout). Concerning the stator, the material must be light and stiff as well, but the tolerances are much larger. Modelling will be done to define which material is best (among aluminium, ceramics, granite, titanium, carbon…).

4. Summary, Conclusion and Future work

A rotary mount is being designed by a Ph.D. student from Cranfield University within the CERN Metrology Laboratory. The aim is to make possible the form error measurement and sub-micrometric positioning of small cylindrical features such as a stretched wire. The requirements for its different parts have been described and existing solutions have been considered.

The design of this mount is in progress and the simulations as well as the validating tests are to be undertaken. A non-negligible part of the future work will be the integration on the CMM and the calibration process of the sensor.

References

[1] N. Catalán Lasheras et al., "Measuring and aligning accelerator components to the nanometer scale", IPAC 2014, Dresden, Germany, 2014

[2] C.Sanz et al.,"Characterisation and measurement to the sub-micron scale of a reference wire position", CIM, Paris, France, September 2015

[3] C.Pruss et al., "Diffractive Elements for Chromatic Confocal Sensors", DGaO Proceedings 2005, ISSN:1614-8436