Compact Translatory Actuator with Moving Magnets and Flexure Guide for Versatile Applications

T. Bödrich, F. Ehle, J. Lienig
Technische Universität Dresden, Institute of Electromechanical and Electronic Design, Germany

Thomas.Boedrich@tu-dresden.de

Abstract

Translatory motions for small strokes up to appr. 25 mm can advantageously be realised with simple single-phase linear direct drives. Compared to voice-coil actuators, motor designs with moving permanent magnets and slotted stator winding offer higher forces related to winding losses and volume. Furthermore, the limited stroke allows for utilization of stick-slip-free flexure guides. An actuator based on such a design is presented in this paper. It is intended for position- or force-controlled operation in small machine tools, automation and assembling.

1 Introduction

Simple single-phase electrodynamic feed units for strokes in the *cm* range are currently being developed at Technische Universität Dresden within a German research programme on future small machine tools [1]. Motor designs based on moving permanent magnets and a slotted single-phase stator winding are utilized for these actuators, since the volume-based actuator constant

$$E' = \frac{F^2}{P_{\mathrm{Cu}} \cdot V} \tag{1}$$

(F thrust force at fixed mover, P_{Cu} winding losses, V envelope volume) of moving-magnet actuators is 2…3 times greater than that of comparable moving-coil actuators [2]. This higher compactness is mostly due to smaller air gaps and larger cross-sectional winding areas (and hence larger magnetomotive forces) possible with slotted single-phase stator windings compared to moving coils [3].

A first prototype of such a feed unit of size (40 x 44 x 42) mm^3 with 11 mm stroke of a ball-guided slide, a peak force of 39 N and an embedded position control is presented in [4]. Lateral magnetic attraction forces between the permanent magnets of the

mover and the stator as present in this cube-shaped feed unit can be avoided with an axisymmetric actuator design, since those forces compensate along the mover circumference. This allows for a virtually stick-slip-free flexure-based guide of the mover, making such an actuator suitable for precise positioning tasks.

2 Actuator Design

Fig. 1 and Fig. 2 show the newly developed translatory moving-magnet actuator with flexure guide. A tubular mover with radially polarized NdFeB permanent magnets moves translatory between two ferromagnetic stator sections in axial direction. The outer stator contains a single-phase winding concentrically wound around the mover magnets and the inner stator (Fig. 2). In order to effectively minimise eddy currents during dynamic operation with a simple mechanical design, the stator components are made of a soft-magnetic composite material rather than of radially stacked electric sheets. Design variants and dimensioning of the magnetic circuit of those single-phase moving-magnet actuators are outlined in [3] and [5]. The axial travel range of the mover equals the axial width of each of the two poles of the outer stator section (14 mm). With the chosen magnetic design the magnetic force is nearly constant along the stroke range and proportional to the current (Fig. 3a).

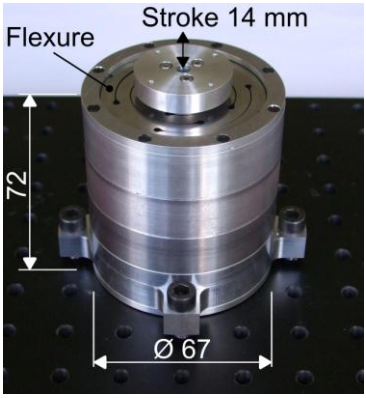

Figure 1: Moving-magnet translatory actuator with flexure guide

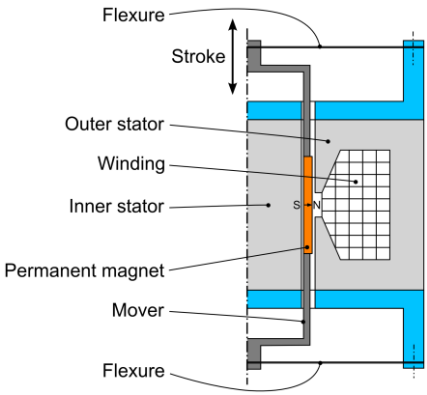

Figure 2: Schematic cross-sectional view of the actuator

The net actuator force usable for actuation of loads differs from the magnetic force by the restoring force of the flexure guide (Fig. 3b). The small total axial stiffness of the

flexure guide of 3.55 N/mm results in small ohmic losses of 4.4 W (at 40 °C winding temperature) in both mover end positions due to deflection of the guide. With careful, mostly FEA-based design of the flexures it was possible to realise a large stroke of ±7 mm = 14 mm with an outer diameter of each flexure of only 59 mm, resulting in a compact overall actuator design.

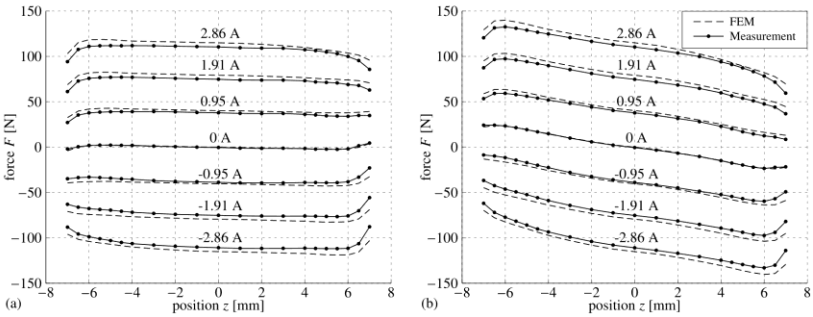

Figure 3: Force-position-current characteristic of the actuator a) without and b) with the restoring force of the flexure guide

3 Preliminary Technical Data

Features of the developed moving-magnet actuator with flexure guide are:

- travel range 14 mm,
- continuous magnetic force 44 N (without restoring force of the flexure guide; higher continuous force possible with higher wire insulation class),
- peak force 112 N (without restoring force of the flexure guide, see Fig. 3),
- compact magnetic circuit ∅ 67 mm, axial length 32 mm (total axial length 72 mm due to space for deflection of the flexure guide),
- volume-related actuator constant incl. space for flexure guide 0.62 $N^2/(W{\cdot}cm^3)$, of magnetic subsystem only excl. space for flexure guide 1.32 $N^2/(W{\cdot}cm^3)$ [2],
- mover mass 0.085 kg,
- inductance 179 mH, electrical time constant of the slotted winding 16 ms,
- with 48 VDC supply voltage during position-controlled stroke maximum velocity of 1.7 m/s and peak acceleration of 34 g to be expected.

The control electronics already developed for state space position control of the above-mentioned cube-shaped feed unit [4] is currently redesigned and integrated into the newly developed cylindrical actuator, together with a low-cost optical incremental position sensor. Flatness-based control of the mover position or force resp. is currently implemented in this electronics. A positioning accuracy of 1 µm or better is aimed for.

4 Conclusions and Outlook

The developed moving-magnet actuator features a linear force characteristic, high force density and good dynamic behaviour. The integrated flexure guide makes it suitable for precise positioning tasks, especially with the position sensor and embedded control electronics currently being integrated. With latter components the actuator can become a compact and cost-efficient drive unit for versatile applications in small machine tools, automation and assembling.

5 Acknowledgements

The authors would like to thank the German Research Foundation (Deutsche Forschungsgemeinschaft - DFG) for funding of the presented work within the Priority Programme SPP 1476 "Small machine tools for small work pieces".

References:

[1] Wulfsberg, J. P.; Grimske, S.; Kong, N.: Kleine Werkzeugmaschinen für kleine Werkstücke. wt Werkstattstechnik online 100 (2010) 11/12, pp. 886-891

[2] Bödrich, T.; Süßenbecker, M.; Ehle, F.; Lienig, J.: Kompakte einphasige Lineardirektantriebsmodule für kleine Verfahrwege. ant Journal 1/2013, pp. 16-21

[3] Bödrich, T.: Modellbasierter Vergleich einphasiger permanentmagneterregter translatorischer Wandler (Model-Based Comparison of Single-Phase, Permanent-Magnetically Excited Translatory Converters). ETG-Fachbericht 118+119, Berlin, Offenbach: VDE-Verlag 2009, pp. 85-90

[4] Bödrich, T.; Süßenbecker, M.; Lienig, J.: Electrodynamic Feed Units for Small Machine Tools. Proc. of 12th euspen Int. Conf., Stockholm, June 4-8, 2012, Vol. 1, pp. 519-522

[5] Jack.; A. G.; Al-Otaibi, Z. S.; Persson, M.: Alternative Designs for Oscillating Linear Single Phase Permanent Magnet Motors Using Soft Magnetic Composites. Proc. of ICEMS 2006 Int. Conf. on Electrical Machines and Systems, Nov. 20-23, 2006, Nagasaki, Japan, Paper ID DS4F2-07