Fabrication of artifical biomimetic wing of dragonfly and its aerodynamic effect

S. Umezu[1, 2], H. Hashimoto[1] and H. Ohmori[2]
[1]*Tokai Univ., Japan*
[2]*Riken, Japan*

umezu@tokai-u.jp

Abstract

Research on MAV (Micro air vehicle) has been carried out by many researchers to gather information in environmental monitoring, security and so on. When the earthquake, fire, smoke take place, it is difficult for human beings to investigate the detail because of dangerous condition. However, MAV has possibility to investigate the detail because MAV can fly freely around. Recently, dragonfly is highly focused by many researchers because dragonfly has high flight performances those are high efficiency flight, unintended acceleration, rapid turn and hovering. In general, these characteristics have root that wing is corrugation shape. We focus on microstructures on wing and its aerodynamic characteristics because there are many unique microstructures that are many umbos, micro bio-vortex and so on. This paper presents the umbos on wing vein of dragonfly. Over three thousands of umbos exist on two sides of wing. The length and shape of umbos are 10 to 100 micron meters and oblique circular cone. It is important to clear the aerodynamic effect of the oblique circular cone. Artificial umbos are fabricated by application of electrolytic polishing. The artificial umbos are set on metal sheet by micro resistance welding in the condition that the optimized pressure is put between the artificial umbos and the metal sheet. Artificial wing consist of several hundred umbos that are set on metal sheet. Flow visualization experiments using the artificial wings are carried out to investigate aerodynamic effect of umbos on metal sheet. The artificial wing, natural wing and metal plate are conducted to originally developed flaps simulator in a steady state of flow. Laminar flow is observed after the simulator in case that the artificial wing and natural wing are used. Turbulent flow and vortex is observed after the simulator in case that the metal sheet is used. These results indicate that dragonfly control the flow around its body utilizing the many umbos on wing.

1 Introduction

Research on Micro Air Vehicles (MAV) has been carried out [1-3] because MAV has potential to develop information gathering in environmental monitoring, security. Flying insects give researchers biomimetic inspiration for MAV. Recently, dragonfly is highly focused by many researchers because dragonfly has high flight performances those are high efficiency flight, unintended acceleration, rapid turn and hovering. These characteristics have root in wing. We focus on umbos that are located on wing vein shown in Fig. 1. In this paper, we fabricate artificial umbos that and investigate flow around artificial wing that has fabricated umbos.

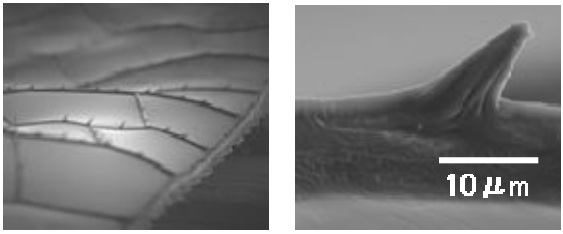

(a) Obverse side (b) Reverse side

Fig.1 Umbos on wing vein of dragonfly.

2 Experimental set-up

The electrolytic polishing sharpens tungsten wire. However, the shape is like circular cone. Tungsten wire is sharpened and its shape is oblique circular cone when new flow of electrolysis solution to the tungsten wire is created. The inclination angle of the cone is controlled by the strength of the flow. AC voltage application is more suitable than DC voltage application to fabricate umbos rapidly. Time to fabricate the artificial umbo in case of AC voltage application is about 1 to 2 minutes. However, fabrication time in case of DC voltage application is more than several ten minutes. Figure 2 shows experimental set-up of electrolytic polishing to fabricate umbos. Tungsten wire electrode is set under platinum wire electrode that is installed in syringe. These electrodes are set in NaOHaq. When AC voltage is applied between electrodes, electrolytic polishing [4] takes place. When the pressure in syringe is changed, the flow of electrolysis solution and shape of the tungsten wire are changed.

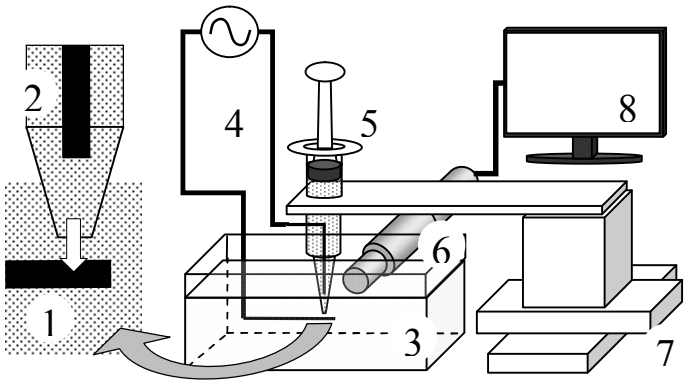

Fig.2 Experimental set-up of electrolytic polishing device.
(1: tungsten wire, 2: platinum wire, 3:10%NaOHaq, 4: AC power supply, 5: syringe, 6: microscope, 7: xyz stage, 8: PC)

3 Results

Figure 3 shows the tip of the tungsten wire in processing. The fabricated tip of tungsten wire is oblique shape when the processing time is over 1 min. When the flow strength of electrolysis solution is changed, the angle of the oblique shape is changed. Figure 4 shows fabricated umbos. The height of the fabricated umbos is about 10 to 100 micron meters and the shape is like real umbo. Figure 5 shows artificial wing. The fabricated umbos are located on Al plate by using micro spot welding [5]. In this paper, 100 umbos are set on the wing shown in Fig. 5. Flow visualization experiments using the artificial wings are carried out to investigate aerodynamic effect of umbos. Smoke-wire technique is applied. The artificial wing, natural wing and metal plate are conducted to originally developed flaps simulator in a steady state of flow. The velocity in the wind tunnel is 1.56 m/s because of Re number on the wing of dragonfly. The flow is visualized with high speed camera and laser sheet. Laminar flow is observed after the simulator in case that the artificial wing and natural wing are used. Turbulent flow and vortex is observed after the simulator in case that the metal sheet is used. These results indicate that dragonfly control the flow around its body utilizing the many umbos on wing. The detail of this experiment is skipped because of space.

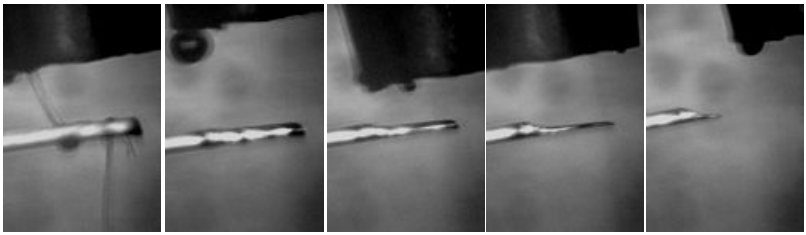

(a) 0s (b) 20s (c) 40s (d) 60s (e) 80s

Fig.3 Tip of tungsten wire when the fabrication is in processing.

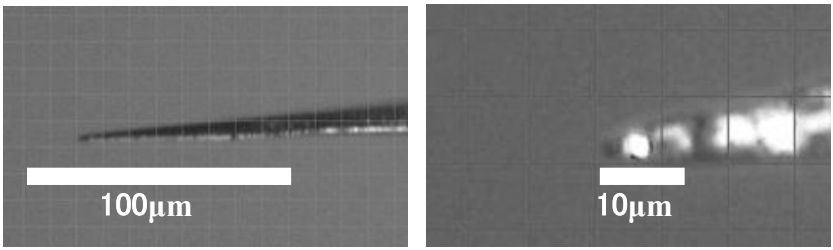

Fig.4 Fabricated umbos

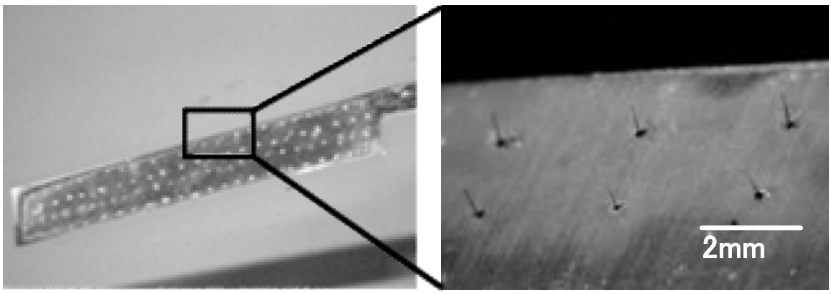

Fig.5 Artificial wing with fabricated umbos. (Left: overview, Right: enlarged view)

References:

[1] Michael H. D., etal., Science, 284 (1999) pp. 1954-1960. [2] Attila J. B., etal., J. Fluid Mech., 591 (2007) pp. 321-337. [3] Mukherjee S., etal., Proc. Annu. Forum Am Helicopter Soc., 66 (2010) pp. 1561-1571. [4] Kulakov M., etal., Langmuir, 25, 8 (2009) pp. 4462-4468. [5] Scotchmer N., etal., Weld J., 86, 12 (2007) pp. 36-39.