Wear Behaviour of PCD Micro-tool While Vertical Micro-grinding of BK7 Glass

Asma Perveen[1], Y.S.Wong [1], M.Rahman [1]
[1]*National University of Singapore, Singapore*
g0700889@nus.edu.sg

Abstract

Being brittle material, glass material is usually fabricated using photolithography and etching process, which are time consuming as well as involve chemical hazards. Therefore, researches are being carried out for fabricating glass micro features by various micromachining processes like grinding, milling, and turning. However, one of the major problems existing in these micromachining processes is the tool wear. This becomes more severe in the case of micro-grinding than in conventional grinding since micro grinding wheel is more sensitive to tool wear. Hence, this paper deals with the wear behavior of Polycrystalline Diamond (PCD) micro tool during micro grinding of Bk7 glass. An on-machine fabricated PCD tool of 670 µm diameter was used to micro-ground almost 65 slots keeping the same cutting conditions of feed rate 10µm/mint, depth of cut 5µm, and spindle speed 2000 rpm. It was found that tool wear caused the diameter reduction as well as length reduction. SEM image of the tool surface gave the clear indication of edge chipping and abrasion type of tool wear where grain pull out, microcracks and built up edge mechanism are responsible for these wear mode.

1 Introduction

Polycrystalline diamond (PCD) cutting tools have found wide acceptance in machining of various hard and brittle materials due to its excellent hardness, strength, wear and corrosion resistance, thermal and electrical conductivity. High flexibility and ability to manufacture complex geometry in one step is the main advantage of grinding process compared to traditional processes [1].However, one major problem of glass micro grinding is the tool wear caused by the hardness of material [2]. Recent researches on micro-grinding have been mainly focused on assessing its tool life and wear mechanism, since the performance of the micro grinding wheel is

more sensitive to the tool wear than those of conventional size. Although a diamond tool can be used to cut nonferrous metals such as aluminum and copper for a distance up to a few hundreds of kilometer [3], during glass cutting an initially sharp tool will wear and become worn out rapidly. As the geometry of the contact zone between tool and the work pieces is extremely important for the attainment of perfect geometric shape, the wear of the diamond tool become a limiting factor in developing machining process for glass. Up to date, there is very little literature available on the tool wear in glass micro-machining. Therefore, this paper is focused on the wear propagation of diamond tool during time consumed.

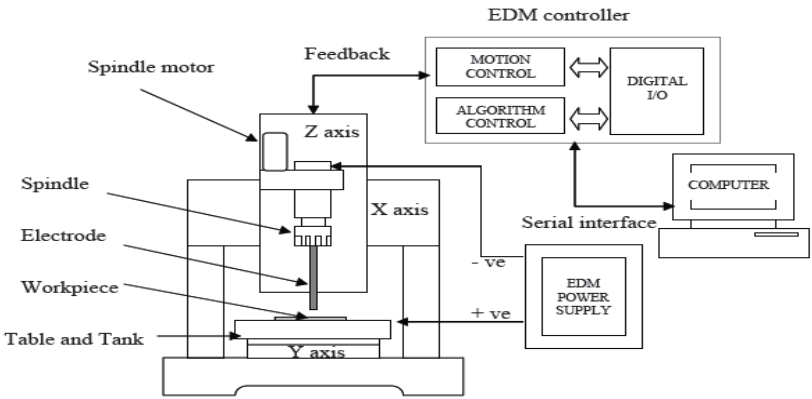

Figure 1: Schematic diagram of the setup with multi-purpose miniature machine tool.

2 Experimental Details

A multi-purpose miniature machine tool developed for high-precision micro-machining at National University of Singapore (NUS), is used for conducting both the block-µEDM and microgrinding experiments shown in Fig.1. Commercially available PCD tool containing 0.5 micron grain size was shaped by micro-EDM using capacitance of 100pF and voltage of 100V. During experiment, total 65 micro-channels were ground onto the Bk7 glass material. The assessment of actual grinding tool wear was conducted by inspecting its topography using SEM.

3 Results and Discussions

Due to tool wear, both length and diameter reduction was found to take place. Fig. 2(a) and (b) has shown that actual diameter and length of tool decrement along with

increasing number slot. Basically, vertical micro-grinding tool experienced corner wear, which causes the rounding of tool at bottom portion [2]. As a result, diameter of the tool started to decrease. At the same time abrasive nature of glass material also contributes to the tool length wear as well as diameter reduction. As seen from fig.2 (a), length wear of the tool had steeper slope initially then it became flattened a bit. This behavior indicates that initially tool has suffered more wear and then it become lesser as the number of slot increases. It is also observed that the slope of radial tool wear curve is less steep than the slope of length wear curve. The reason might be the diminishing tendencies of radial wear along with the length wear increment.

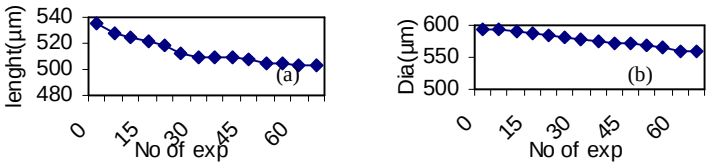

Figure 2: (a) Tool length decrease (b) tool diameter decrease as the total number of slot no increase.

Two types of tool wear have been observed from the SEM picture of tool. Abrasion type of wear has been noticed to be dominating on the bottom of surface mainly, which causes the reason of radial wear and length reduction. Arc pattern like wear land was found in fig. 3(b).These are being typical abrasion wear. The cause of these appearances may be that the binder of the tool is abraded by silicon particles of the hard glass material, which leads PCD grains to be detached from the bond. Some hole was also found on the bottom of tool after 30 and 65 slots due to the pull out of grain along with the bonding element. This void type of hole actually indicates the location where diamond grains were dislodged from the cutting edge. Some edge chipping type of wear was found in fig.4(a) and (b).The length of this kind of wear was found to be nearly 30-50 µm. Repeated impact with the cutting edge were thought to generate a sufficient load at the cutting edge that produce chipping wear. It was also noticed that the number of micro-chipping wear land increases along with the machining time. It was also addressed that two nearby chipping layer superimposed and become a long chipping layer. Fig. 4(c) also shows the remarkable micro cracks in the wear region of PCD tool using higher magnification. These cracks can propagate along a grain boundary or through a group of grains,

under the variable impact loadings and form the wear regions. So it was suggested that the wear process of PCD is the initiation and propagation of these cracks causing rupture and disintegration of the tool material. From fig.4(c) grain pull out voids was also found. Grain pull out type of wear is basically the consequence of using very fine grain as cutting edge. Micro-crack propagation also contributes to the fraction, whole and group of grain pullout.

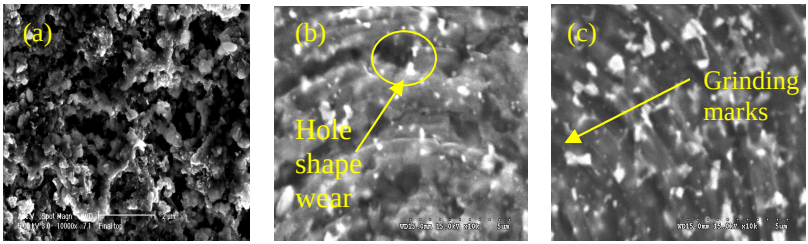

Figure 3: Magnified view of bottom after machining (a) 0slots (b) 30 slots(c) 60slots

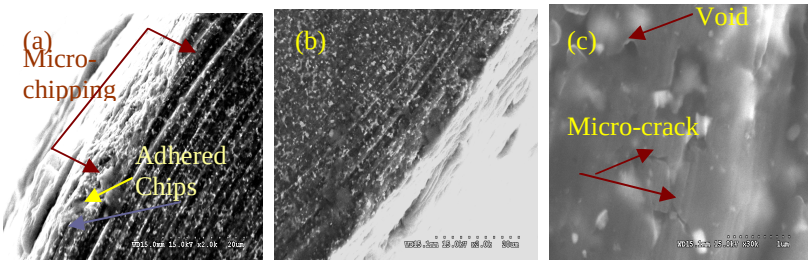

Figure 4: Wear condition at the edge and side surface after cutting 60 mm distance.

4 Conclusions

Basically, two type of tool wear has been detected. One is edge chipping at the tool rim which is actually responsible for radial reduction in tool diameter as well. Nearby chipping edge get superimposed and create bigger area of chipping. Another is abrasive wear which causes the weaker grain boundary to break down faster creating some inter-granular crack.

References:

[1] H. K. Tonshoff, c. Arendt, R. Ren Amor, cutting of hardened steel Ann. CIRP 49 (2) (2000) 547-566(keynote paper)
[2] Grinding technology, theory and applications of machining with abrasives by S. Malkin, 1989.
[3] H. Hamada, Diamond tools for ultra precision machining, J. Jpn. Soc, Precis. Eng. 51(9) (1985) 9-13.