Joint Special Interest Group meeting between euspen and ASPE
Advancing Precision in Additive Manufacturing
KU Leuven, Belgium, September 2023
www.euspen.eu

Dimensional accuracy of additively manufactured AlSi10Mg parts: Study of the influence of build platform position, process parameters and repeatability

Mergim Krasniqi[1], Frank Löffler[1]

[1]*Physikalisch-Technische Bundesanstalt, Bundesallee 100, 38116 Braunschweig, Germany*

mergim.krasniqi@ptb.de

Abstract

The success of additive manufacturing (AM) in various industries also depends on dimensional accuracy, which is crucial for the functional performance of the parts. This paper presents a comprehensive study on the dimensional accuracy of additively manufactured AlSi10Mg components using the laser powder bed fusion (L-PBF) process. A test part was designed in accordance with the ISO/ASTM 52902 standard, consisting of various geometric elements. Cylindricity, roundness, planes and distances were measured and investigated, especially by computed tomography (CT). To ensure the reliability of the results, the test part was manufactured in a total of 18 samples and the influence of three different factors on dimensional accuracy was investigated: build platform positions, process parameters and repeatability (i.e., reproduction/duplication of parts on the same machine).
The results show that the five different build platform positions (centre and four corners of the build platform) have no significant influence on the dimensional accuracy, while the process parameters, such as laser power and scanning speed, have a significant impact on dimensional accuracy. This finding highlights the importance of selecting appropriate process parameters to achieve high dimensional accuracy in AM. In addition, the repeatability of the results was studied by producing five samples with the same parameters and at the same location on the building platform. The results show high repeatability, indicating the reliability of the manufacturing process, which is essential for quality control and standardisation of AM parts.
The gap being filled by this paper is the need for a comprehensive study of the dimensional accuracy of AM components. A systematic study of the presented factors on dimensional accuracy is still lacking. This work aims to fill this gap by investigating the influence of build platform position, process parameters and repeatability on the dimensional accuracy of additively manufactured AlSi10Mg components.

Dimensional accuracy, L-PBF, AlSi10Mg, build platform position, process parameters, repeatability, CT

1. Introduction

AM offers several advantages over conventional manufacturing methods, such as design flexibility, material savings, weight reduction and one-step manufacturing. However, AM also faces a number of challenges in terms of part quality, particularly dimensional accuracy and surface roughness. Dimensional accuracy is one of the critical factors to be considered for the successful use of AM in various industries, as it affects the functionality, performance and assembly of the parts. Therefore, it is important to understand and optimise the factors affecting the dimensional accuracy of AM parts.

Much of the research on L-PBF has focuses on material properties and microstructure [1-4], but further research is needed to study the factors that influence dimensional accuracy. In previous studies, the dimensional accuracy and surface roughness of AlSi10Mg components were investigated using different process parameters, build directions, wall thicknesses and lattice structures [5-7]. The build direction was found to have a significant influence on dimensional accuracy, with the x-direction having a greater deviation from the nominal value than the y-direction [5-6]. In addition, process parameters such as laser power and scanning speed play a crucial role, with higher laser power and lower scanning speed resulting in lower surface roughness but higher dimensional deviation. Component design is also an important factor in the minimisation of dimensional variation [5,7].

Additively manufactured parts often have high surface roughness values that affect dimensional accuracy. Understanding the interplay between surface roughness, part geometry, material properties and process parameters is critical to minimising dimensional errors and achieving high accuracy. The relationship between surface roughness and dimensional accuracy is complex. Higher surface roughness values typically correlate with greater deviations from nominal dimensions, and irregularities can cause dimensions to expand or contract [5-6,8].

While these previous studies focused primarily on the influence of process parameters on dimensional accuracy, this study goes beyond that and also investigates repeatability and the influence of build platform positions. By studying the influence of various factors, this study fills a gap in the existing literature by providing a more holistic view of the factors that influence dimensional accuracy in AM.

The objective of this work is to conduct a study on the geometric dimensional accuracy of additively manufactured AlSi10Mg components using L-PBF technology. The specific objectives are (1) to measure the cylindricity, roundness, planes and distances of the test part using the CT system and compare them with the nominal values from the CAD model; and (2) to investigate and evaluate the influence of three different factors on the dimensional accuracy: build platform position, process parameters and repeatability.

2. Methodology

2.1. Test part

The test part used in this study consists of various geometric elements from the ISO/ASTM 52902 standard for geometric capability assessment of additive manufacturing systems [9]. The standard provides a set of test geometries that can be used to evaluate different aspects of geometric performance such as dimensional accuracy, surface quality and feature resolution. The test part is shown in Figure 1.

The test piece has a base plate with dimensions of 50 mm x 45 mm x 5 mm and a total height of 20 mm. The following geometries are included:

- Four cylinders and four holes with diameters of 2 mm, 3 mm, 4 mm and 5 mm. These geometries were used to measure cylindricity.
- Three hemispheres and three calottes with diameters of 3 mm, 4 mm and 5 mm used for roundness measurements.
- Seven planes with different angles (0°, 15°, 30°, 45°, 60°, 75° and 90°) in relation to the base plate. These geometries were used to measure the planarity and angle of the planes.
- Two concentric hollow cylinders with 23.5 mm and 8 mm outer diameter. On these elements, circular rings are measured at different heights.
- Distance measurements in x and y direction: The elements for the distance measurements are positioned so that the distances can be determined in x and y direction. The elements have a spacing of 2.5 mm, 5 mm, 7.5 mm and 10 mm in each orientation.

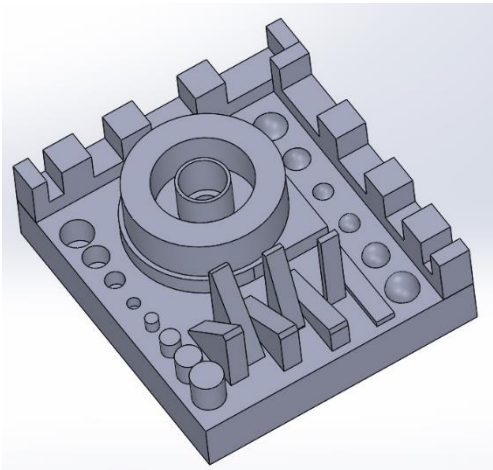

Figure 1. Test piece configuration with geometric elements from ISO/ASTM 52902 standard [9]

2.2. L-PBF system and process parameters

The L-PBF system used for this study is a DMG Mori Lasertec 30 SLM 2nd Gen. with a build envelope of 300 mm x 300 mm x 300 mm. The system uses a fibre laser with a spot size of 80 µm. The material used is AlSi10Mg powder with a particle size distribution of 20 µm - 63 µm. The fabrication process was carried out under argon atmosphere to keep the oxygen level below 0.2 % and the temperature of the build platform was set at 200 °C. The scanning strategy is a bidirectional stripe exposure with a 67° rotation of the laser from layer to layer. The layer thickness was a constant 0.04 mm.

To investigate the influence of build platform position, process parameters and repeatability, 18 test samples were produced (see Table 1).

Table 1. Experimental design and process parameters

Factor	Laser power P_L [W]	Scan speed v_s [m/s]	Hatch distance h_s [mm]
Build platform position	350	1.2	0.14
	350	1.2	0.14
	350	1.2	0.14
	350	1.2	0.14
	350	1.2	0.14
Process parameters	300	0.8	0.1
	300	0.8	0.18
	300	1.6	0.1
	300	1.6	0.18
	400	0.8	0.1
	400	0.8	0.18
	400	1.6	0.1
	400	1.6	0.18
Repeatability	350	1.2	0.14
	350	1.2	0.14
	350	1.2	0.14
	350	1.2	0.14
	350	1.2	0.14

Build platform position:

In order to study the influence of different build platform positions in the L-PBF system (with otherwise identical process parameters) on the dimensional accuracy, five test parts were produced at different positions of the build platform. One test part was produced in the centre of the build platform, while the other four samples were produced in the corners.

Process parameters:

To study the influence of different process parameters such as laser power, scanning speed and hatch distance on dimensional accuracy, eight samples were produced with different sets of parameters. The process parameters were varied according to a full factorial design with two levels for each parameter [10] (see Table 1).

Repeatability:

To ensure and study repeatability, five additional samples were produced individually with the same parameters at the same location (centre) of the build platform (see Table 1).

2.3. CT system

The CT system used in this study is a TomoScope XS from Werth Messtechnik with the specification

$$MPE_E = 4.5\ \mu m + L / (75\ mm/\mu m)\ ;\ \text{with L in mm} \qquad (1)$$

The system has an X-ray voltage of max. 160 kV and a detector size of 2 800 x 2 200 pixels. The test parts were scanned with a voltage of 160 kV, a current of 320 µA and an integration time of 666 ms in a 360° on-the-fly measurement with 3 500 steps. One measurement took about 60 minutes per sample.

The scanned data were processed using WinWerth software to reconstruct the three-dimensional images of the samples and measure the geometric features in accordance with the ISO/ASTM 52902 standard [9].

3. Results and discussion

3.1. Build platform position

The results of the dimensional accuracy measurements for the five build platform positions (centre and corners) are shown in Figure 2 in the form of box plots. A total of 40 measured deviations per test specimen are used to generate the box plots. Measurement data from all elements (cylinders, spheres, distances) are used, except for angle measurements.

The lower and upper edges of the box frame represent the first (Q1, lower edge) and third (Q3, upper edge) quartiles of the measured deviations (i.e. 25th and 75th percentiles). The mean (cross in the box) and median (horizontal line in the box) of the deviation values are also shown. In a box plot, the minimum and maximum values are represented by whiskers. All other outliers are shown as individual points (outliers are only shown in Figure 4). Whiskers and outliers are determined using the 1.5 interquartile range (IQR) method [11].

$$IQR = Q3 - Q1 \quad (2)$$

$$\text{Lower whisker (5th percentile)} = Q1 - 1.5 \cdot IQR \quad (3)$$

$$\text{Upper whisker (95th percentile)} = Q3 + 1.5 \cdot IQR \quad (4)$$

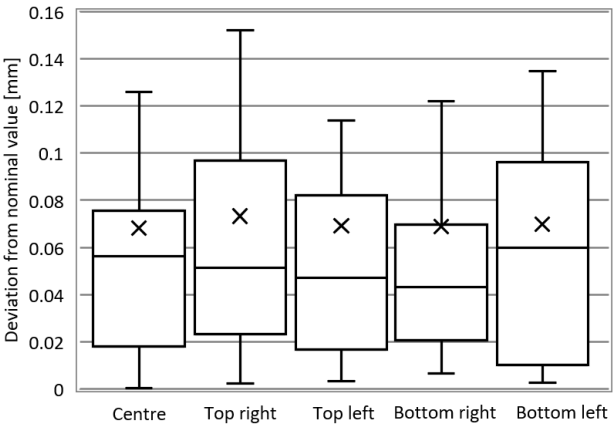

Figure 2. Geometric deviations for different build platform positions

The results show that there is no clear trend or pattern in how the build platform positions affect dimensional accuracy. The mean deviations for all samples are between 0.06 mm and 0.08 mm. For example, some measured variables such as cylindricity have smaller deviations in the centre test part than in the corners, while other measurands such as angle and distance have larger deviations in the centre test part. This could indicate that there are factors that affect dimensional accuracy more than the build platform position, such as process parameters, part geometry and measurement uncertainty. The deviations from the nominal values are within 0.15 mm for most measurands, except for the hemispheres.

It can be concluded that the position of the components on the build platform is not a critical factor for the dimensional accuracy of L-PBF components. Similar results can be achieved regardless of the position of the build platform as long as the process parameters are controlled. This is a desirable result as it means that the L-PBF system can achieve consistent quality across the entire build platform.

3.2. Process parameters

The geometric deviations of the test parts produced with different parameter sets are shown in Figure 3. The deviations are presented in the form of box plots and the deviation measurement data of the cylinders, spheres and distances are included.

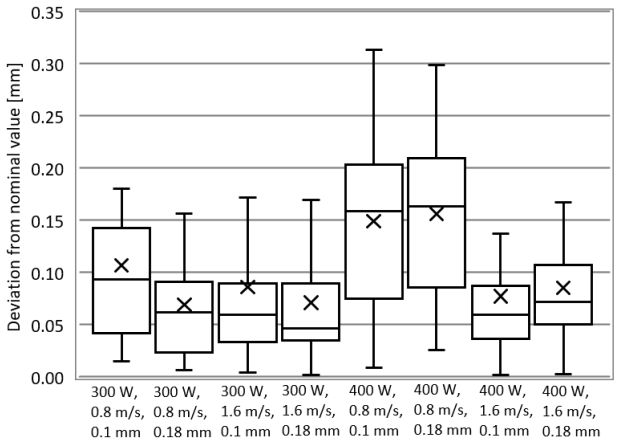

Figure 3. Geometric deviations for different process parameters

The results show that the process parameters have a significant influence on the geometric deviations of the test parts. The parameter sets with higher laser power (400 W) and lower scanning speed (0.8 m/s) lead to greater deviations from the nominal values, while the parameter sets with combinations of high and lower laser power (400 W / 300 W) and higher scanning speed (1.6 m/s) lead to smaller deviations. Likewise, parameters with low laser powers (300 W) and scanning speeds (0.8 m/s) lead to smaller deviations. This can be explained by the fact that higher laser power and lower scanning speed increase the heat input and the size of the melt pool, which can lead to more thermal distortion and shrinkage [12].

The average deviations are between 30 µm and 170 µm for cylindricity, between 90 µm and 230 µm for roundness, between 0.4 % and 0.9 % for angular deviation and between 40 µm and 170 µm for distance deviation.

The hatch distance has no significant influence on the dimensional accuracy. In general, a smaller hatch distance (0.1 mm) does not lead to smaller or larger deviations than a larger hatch distance (0.18 mm), with the exception of parameter set 300 W / 0.8 m/s / 0.1 mm, which has larger deviations than parameter set 300 W / 0.8 m/s / 0.18 mm.

3.3. Repeatability

The results of the dimensional accuracy measurements for repeatability are shown in Figure 4. To illustrate the similarity of the results of the five test parts, the outliers in the box plot are also indicated (three outliers each for all five test parts).

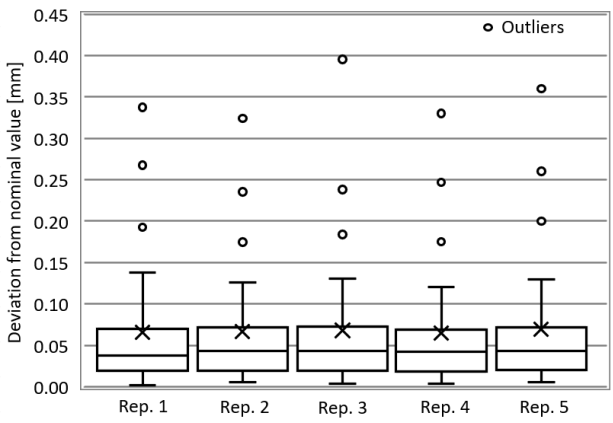

Figure 4. Dimensional accuracy results for the repeatability study

The results show that the L-PBF system can provide consistent results under the same conditions, as all deviations from the nominal values are very similar for all five test parts (mean and median deviations, Q1, Q3, whiskers, outliers). The deviations are within 0.15 mm for most measured features, with the

exception of some outliers, such as some of the hemisphere measurements.

This indicates that the L-PBF system has a high degree of repeatability, which means that the system can produce parts with similar dimensional accuracy in different runs.

4. Summary and conclusion

The main findings of this study are:

- The position of the test parts on the build platform has no significant influence on the dimensional deviations and the L-PBF system has a consistent performance across the build platform.
- The process parameters have a significant influence on the dimensional deviations. In particular, parameter sets with higher laser power and lower scanning speeds lead to greater deviations from the nominal values. All other parameter sets resulted in similar dimensional deviations. The hatch distance also affects the geometric deviations, but is less significant than the laser power and the scanning speed.
- The L-PBF system is capable of producing consistent parts with high repeatability and dimensional accuracy under identical conditions.
- In this study, the lowest average deviations were achieved on average with the following parameters (parameters of the build platform and repeatability study): 350 W laser power, 1.2 m/s scan speed, 0.14 mm hatch distance.

Overall, this study contributes to the knowledge of dimensional accuracy of AM parts and fills a gap in the literature by providing a comprehensive investigation and evaluation of dimensional accuracy based on various factors studied. The results show the importance of selecting appropriate process parameters and preparing the build job adequately to achieve high dimensional accuracy.

5. Future work

In addition to the results presented in the study, there are several areas for future work that can further improve the understanding of dimensional accuracy in AM of AlSi10Mg components.

An important aspect is the optimisation of process parameters. Although the study has determined the influence of laser power, scan speed and hatch distance on dimensional deviations, there is still room for further investigation. Parameter studies can be used to determine optimal parameter combinations for specific geometries. By refining the process parameters, higher dimensional accuracy can be achieved.

Another area for future research is the development of predictive models. Based on the knowledge gained from experimental studies, data-driven dimensional accuracy prediction models can be developed. These models can take into account different process parameters, material properties and part geometries as inputs to estimate the resulting dimensional deviations. The use of predictive models can reduce the need for extensive experimental testing. This can make a significant contribution to improving dimensional accuracy in AM.

Future work could also study the use of alternative techniques to measure dimensional accuracy, such as coordinate measuring machines (CMMs), optical scanning or in-situ monitoring. These techniques can partially capture dimensional deviations in real time during the AM process, providing a better understanding of the process dynamics and helping to identify potential sources of dimensional error. By using more advanced measurement techniques that provide more detailed information, deeper insights into the AM process and its impact on dimensional accuracy can be gained.

To confirm the results of this study, further measurements on a CMM have already been initiated for this purpose.

Acknowledgements

This work was supported by the doctoral programme of the Physikalisch-Technische-Bundesanstalt (PTB).

References

[1] Kempen K, Thijs L, Van Humbeeck J and Kruth J-P 2012 Mechanical Properties of AlSi10Mg Produced by Selective Laser Melting *Physics Procedia* **39** 439–446 https://doi.org/10.1016/j.phpro.2012.10.059

[2] Takata N, Kodaira H, Sekizawa K, Suzuki A and Kobashi M 2017 Change in microstructure of selectively laser melted AlSi10Mg alloy with heat treatments *Materials Science and Engineering: A* **704** 218–228 https://doi.org/10.1016/j.msea.2017.08.029

[3] Limbasiya N, Jain A, Soni H, Wankhede V, Krolczyk G and Sahlot P 2022 A comprehensive review on the effect of process parameters and post-process treatments on microstructure and mechanical properties of selective laser melting of AlSi10Mg *Journal of Materials Research and Technology* **21** 1141–1176 https://doi.org/10.1016/j.jmrt.2022.09.092

[4] Muhammad M, Nezhadfar P D, Thompson S, Saharan A, Phan N and Shamsaei N 2021 A comparative investigation on the microstructure and mechanical properties of additively manufactured aluminum alloys *International Journal of Fatigue* **146**(1) 106165 https://doi.org/10.1016/j.ijfatigue.2021.106165

[5] Kasperovich G, Becker R, Artzt K, Barriobero-Vila P, Requena G and Haubrich J 2021 The effect of build direction and geometric optimization in laser powder bed fusion of Inconel 718 structures with internal channels *Materials & Design* **207** 109858 https://doi.org/10.1016/j.matdes.2021.109858

[6] Kamarudin K, Wahab M S, Shayfull Z, Ahmed A and Raus A A 2017 Dimensional Accuracy and Surface Roughness Analysis for AlSi10Mg Produced by Selective Laser Melting (SLM) *MATEC Web Conf.* **78** 01077 https://doi.org/10.1051/matecconf/20167801077

[7] Waqas M, He D, Elahi H, Riaz S, Eugeni M and Gaudenzi P 2021 Study of the Surface and Dimensional Quality of the AlSi10Mg Thin-Wall Components Manufactured by Selective Laser Melting *J. Compos. Sci.* **5** 126 https://doi.org/10.3390/jcs5050126

[8] Cao L, Li J, Hu J, Liu H, Wu Y and Zhou Q 2021 Optimization of surface roughness and dimensional accuracy in LPBF additive manufacturing *Optics and Laser Technology* **145** 107246 https://doi.org/10.1016/j.optlastec.2021.107246

[9] ISO/ASTM 52902:2019. 2019. Standard Guide for Additive Manufacturing - General Principles - Terminology *ASTM International*

[10] Kleppmann W 2011 Taschenbuch Versuchsplanung *Carl Hanser Verlag GmbH & Co. KG.* **7** https://doi.org/10.3139/9783446429420

[11] Newton L, Senin N, Chatzivagiannis E, Smith B and Leach R 2020 Feature-based characterisation of Ti6Al4V electron beam powder bed fusion surfaces fabricated at different surface orientations *Additive Manufacturing* **36** 101273 https://doi.org/10.1016/j.addma.2020.101273

[12] Li D, Zhang X, Ruixian Q, Jianxin X, Yue D and Chen B 2023 Influence of processing parameters on AlSi10Mg lattice structure during selective laser melting: Manufacturing defects, thermal behavior and compression properties *Optics & Laser Technology* **161** 109182 https://doi.org/10.1016/j.optlastec.2023.109182